H11B0F Series

Rev.A.1.0

The products are 5-pin solid-state relay opto-couplers. The device combines an AlGaAs infrared emitting diode as the emitter which is optically coupled to a monolithic silicon random-phase photo triac to drive a power triac in a plastic DIP5 package with different lead forming options. The products are widely used in solenoid/valve controls, lighting controls, motor controls, temperature controls, static AC power switches, solid state relays, interfacing microprocessors to 265 V_{AC} peripherals.

High isolation 5000 Vrms
DC input with triac output
Operating temperature range - 40°C to 110 °C
REACH & RoHS compliance
HBM: H3B; MM: M4; CDM: C3
CQC approved
VDE approved
UL approved

(Temperature=25°C)

Parameter		Symbol	Value	Unit
Input	Forward Current	I_F	50	mA
	Peak Forward Current	I_{FP}	1	A
	Reverse Voltage	V_R	6	V
	Power Dissipation	P_D	75	mW

R

Output

Operating Temperature	T_{opr}	-40~110	
Junction Temperature	T_j	125	
Storage Temperature	T_{stg}	-40~125	
Soldering Temperature	T_{sol}	260	
Peak pulse voltage (T_j=25 ; non-repetitive,off-state)	V_{pp}	3	kV

:
:

(Temperature=25°C)

Parameter		Symbol	Condition	Min.	Typ.	Max.	Unit
Input	Forward Voltage	V_F	I_F=10mA	-	1.2	1.5	V
	Reverse Current	I_R	V_R=6V	-	-	1	μA
Output	Peak Off-state Current, Either Direction	I_{DRM}	V_{DRM} / V_{RRM} =600V, I_F=0	-	-	5	μA
		I_{RRM}		-	-	5	
	Peak On-state Voltage, Either Direction	V_{TM}	I_{TM}= I_{TM} Rated	-	-	1.5	V
	Critical Rate of Rise of Off-state voltage	dV/dt	V_D=400V, Gate Open I_F=0, T_j=125	1000	-	-	V/μs
	Critical Rate of Rise of Commutating Voltage	(dV/dt)c	(dI/dt)c =1.5A/ms, T_j=125	10	-	-	V/μs
Transfer Characteristics	LED Trigger Current	I_{FT}	Terminal Voltage=6V R_L=100Ω	-	-		mA
	Holding Current	I_H	V_D=6V	-	-	25	mA
	Isolation Resistance	R_{ISO}	DC500V 40~60%R.H.	10^{12}	10^{14}	-	Ω
	Response Time	t_{on}	V_D=6V, R_L=100Ω, I_F=20mA	-	20	100	μs

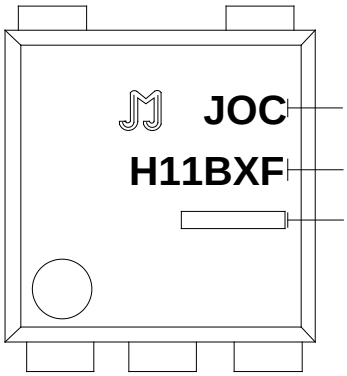

: Company Abbr.
: Part Number & Rank
Production Information Code

FIG.1: Max. Allowable LED Forward Current vs. Ambient Temperature

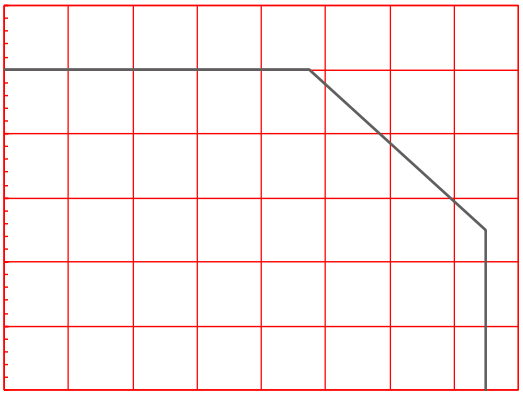

FIG.2: On-state Terminal Current vs. Ambient Temperature

FIG.7: On-state characteristics

FIG.8: Normalized Holding Current vs. Ambient Temperature

FIG.10: Test Circuits of Turn On Time

FIG.11: Waveforms of Turn On Time

FIG.12: Test circuit for inductive and resistive loads to IEC-61000-4-5 standards

° P 0!Ð ` 0

Standard DIP Type:

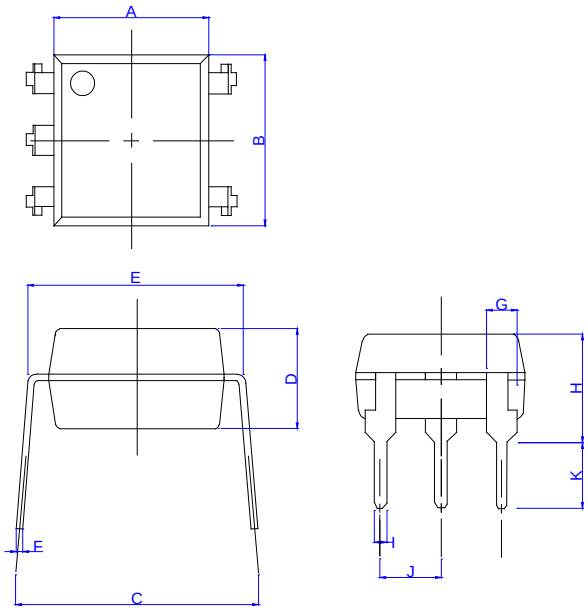

Ref.	Dimensions					
	Millimeters			Inches		
	Min.	Typ.	Max.	Min.	Typ.	Max.
A	6.20		6.60	0.244		0.260
B	6.92		7.32	0.272		0.288
C	7.15		8.95	0.281		0.352
D	3.20		3.60	0.126		0.142
E	7.32		7.92	0.288		0.312
F	0.15		0.35	0.006		0.014
G	1.15		1.35	0.045		0.053
H	3.90		4.50	0.154		0.177
I	0.40		0.60	0.016		0.024
J	2.29		2.79	0.090		0.110
K	2.24		3.24	0.088		0.128

Option SMD Type:

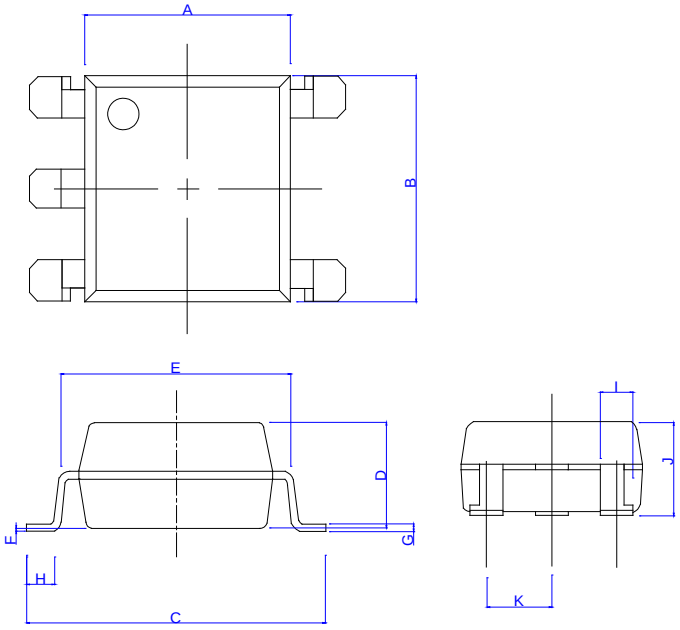

Ref.	Dimensions					
	Millimeters			Inches		
	Min.	Typ.	Max.	Min.	Typ.	Max.
A	6.20		6.60	0.244		0.260
B	6.92		7.32	0.272		0.288
C	9.50		10.50	0.375		0.413
D	3.20		3.60	0.126		0.142
E	7.32		7.92	0.288		0.312
F	0.05		0.35	0.002		0.014
G	0.16		0.36	0.006		0.014
H	0.60		1.40	0.024		0.055
I	0.90		1.50	0.035		0.059
J	3.30		3.90	0.130		0.154
K	2.29		2.79	0.090		0.110

Option SMD

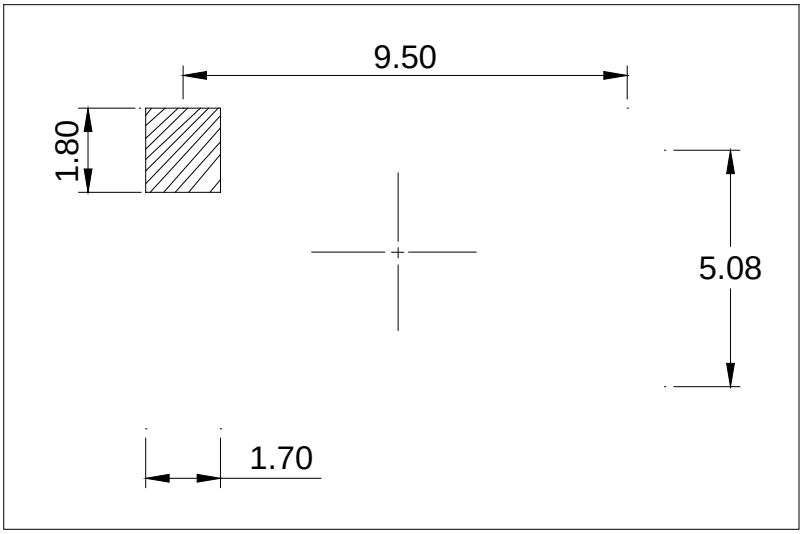

Option T3

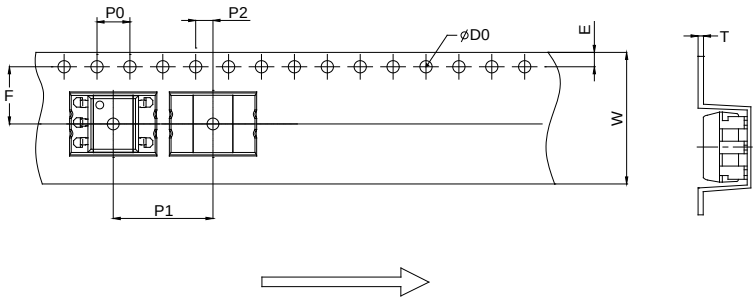

Ref.	Dimensions					
	Millimeters			Inches		
	Min.	Typ.	Max.	Min.	Typ.	Max.
D0		1.50	1.60		0.059	0.063
P0	3.90	4.00	4.10	0.154	0.157	0.161
P1	11.90	12.00	12.10	0.469	0.472	0.476
P2	1.90	2.00	2.10	0.075	0.079	0.083
E	1.65	1.75	1.85	0.065	0.069	0.073
F	7.40	7.50	7.60	0.291	0.295	0.299
T	0.35	0.40	0.45	0.014	0.016	0.018
W	15.70	16.00	16.30	0.618	0.630	0.642

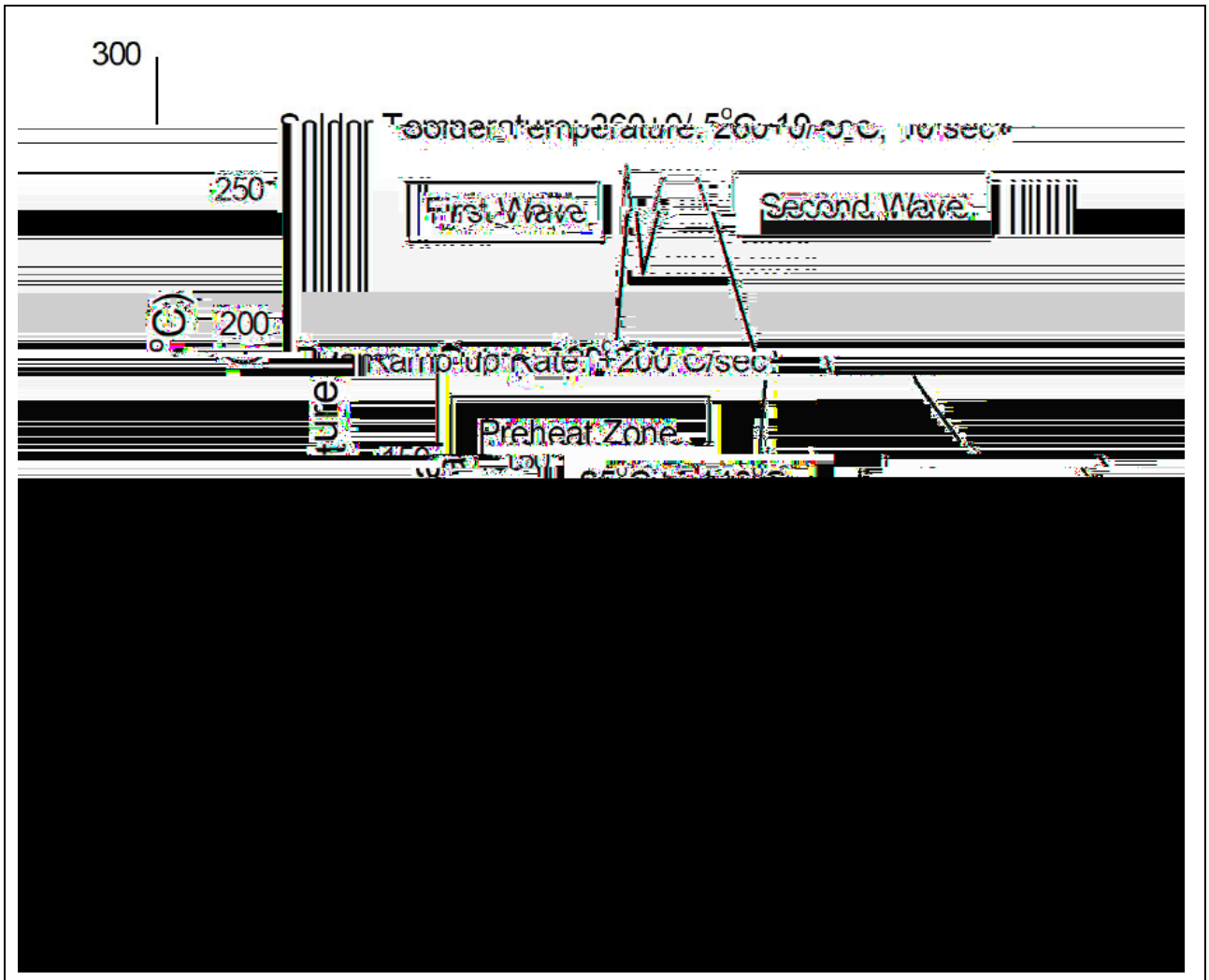

Soldering Temperature	360±5
Soldering Time	3s max.

Note:

1. Reflow soldering is recommended at the temperatures and times shown, no more than three times.

2. Avoid direct contact between the epoxy body and any tools or surfaces exceeding its maximum storage temperature.

3. Application of pressure on the epoxy body is prohibited at elevated temperatures. In specific scenarios, any applied force must not exceed 2.5N.

4. Ensure the component has cooled to ambient temperature before proceeding with any subsequent manufacturing steps.

5. The component has a shelf life of one year when stored under standard conditions.

6. Recommend storage Temp.: 0~40°C;

Recommend storage humidity: <60%;

MSL level: MSL 1

Information furnished in this document is believed to be accurate and reliable. However, Jiangsu JieJie Microelectronics Co., Ltd. assumes no responsibility for the consequences of use without consideration for such information nor use beyond it. Information mentioned in this document is subject to change without notice, apart from that when an agreement is signed, Jiangsu JieJie complies with the agreement.

Products and information provided in this document have no infringement of patents. Jiangsu JieJie assumes no responsibility for any infringement of other rights of third parties which may result from the use of such products and information. This document supersedes and replaces all information previously supplied.

is a registered trademark of Jiangsu JieJie Microelectronics Co., Ltd.

Copyright © 2026 Jiangsu JieJie Microelectronics Co., Ltd. All rights reserved.