H11B1F Series

Rev.A.1.0

## DESCRIPTION:

The products are 5-pin solid-state relay opto-couplers. The device combines an AlGaAs infrared emitting diode as the emitter which is optically coupled to a monolithic silicon random-phase photo triac to drive a power triac in a plastic DIP5 package with different lead forming options. The products are widely used in solenoid/valve controls, lighting controls, motor controls, temperature controls, static AC power switches, solid state relays, interfacing microprocessors to 265 $V_{AC}$ peripherals.

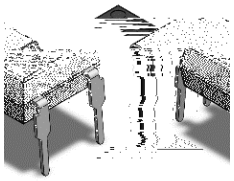

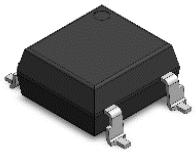

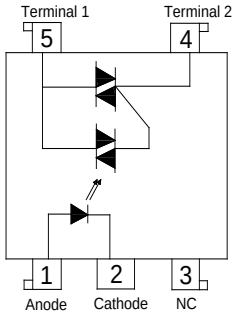


## MAIN FEATURES

High isolation 5000 Vrms
DC input with triac output
Operating temperature range - 40°C to 110 °C
REACH & RoHS compliance
HBM: H3B; MM: M4; CDM: C3
CQC approved
VDE approved
UL approved

## ABSOLUTE MAXIMUM RATINGS (Temperature=25°C)

| Parameter | | Symbol | Value | Unit |
|---|---|---|---|---|
| Input | Forward Current | $I_F$ | 50 | mA |
| | Peak Forward Current | $I_{FP}$ | 1① | A |
| | Reverse Voltage | $V_R$ | 6 | V |
| | Power Dissipation | $P_D$ | 75 | mW |
| Output | Repetitive peak off-state voltage | $V_{DRM}$ | 600 | V |
| | Repetitive peak reverse voltage | $V_{RRM}$ | 600 | V |
| | Critical rate of rise of on-state current | dI/dt | 100 | A/μs |
| | On-state RMS Current ($T_a$≤43 | $I_{T(RMS)}$ | 0.6 | A |
| | Non repetitive surge peak on-state current (full cycle , $t_p$=20ms) | $I_{TSM}$ | 6 | A |
| | junction to case (AC) | $R_{th(j-c)}$ | 65 | ℃/W |
| Isolation Voltage | | $V_{iso}$ | 5000② | Vrms |

| | | | |
|---|---|---|---|
| Operating Temperature | $T_{opr}$ | -40~110 | ℃ |
| Junction Temperature | $T_j$ | 125 | ℃ |
| Storage Temperature | $T_{stg}$ | -40~125 | ℃ |
| Soldering Temperature | $T_{sol}$ | 260 | ℃ |
| Peak pulse voltage ($T_j$=25℃; non-repetitive,off-state) | $V_{pp}$ | 3 | kV |

NOTE1100μs pulse, 100Hz frequency

NOTE2AC for 1minute, R.H.=40~60%

## ELECTRICAL CHARACTERISTICS (Temperature=25°C)

| Parameter | | Symbol | Condition | Min. | Typ. | Max. | Unit |
|---|---|---|---|---|---|---|---|
| Input | Forward Voltage | $V_F$ | $I_F$=10mA | - | 1.2 | 1.5 | V |
| | Reverse Current | $I_R$ | $V_R$=6V | - | - | 1 | μA |
| Output | Peak Off-state Current, Either Direction | $I_{DRM}$ | $V_{DRM}$ / $V_{RRM}$ =600V, $I_F$=0 | - | - | 5 | μA |
| | | $I_{RRM}$ | | - | - | 5 | |
| | Peak On-state Voltage, Either Direction | $V_{TM}$ | $I_{TM}$= $I_{TM}$ Rated | - | - | 1.7 | V |
| | Critical Rate of Rise of Off-state voltage | dV/dt | $V_D$=400V, Gate Open $I_F$=0, $T_j$=125℃ | 1000 | - | - | V/μs |
| | Critical Rate of Rise of Commutating Voltage | (dV/dt)c | (dI/dt)c =1.5A/ms, $T_j$=125℃ | 10 | - | - | V/μs |
| Transfer Characteristics | LED Trigger Current | $I_{FT}$ | Terminal Voltage=6V $R_L$=100Ω | - | - | | mA |
| | Holding Current | $I_H$ | $V_D$=6V | - | - | 25 | mA |
| | Isolation Resistance | $R_{ISO}$ | DC500V 40~60%R.H. | $10^{12}$ | $10^{14}$ | - | Ω |
| | Response Time | $t_{on}$ | $V_D$=6V, $R_L$=100Ω, $I_F$=20mA | - | 20 | 100 | μs |

## ORDERING AND MARKING INFORMATION

| MARKING INFORMATION | |
|---|---|
| 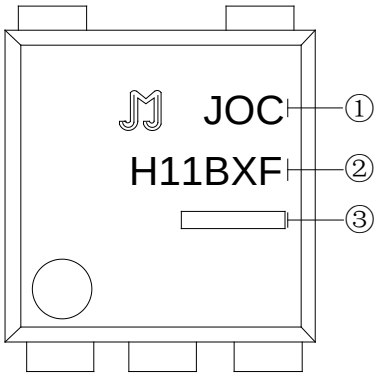 | ① : Company Abbr.<br>② : Part Number & Rank<br>③ : Production Information Code |

| Packing Quantity | | | |
|---|---|---|---|
| Option | Quantity | Quantity – Inner box | Quantity –Outer box |
| DIP | 60 Units/Tube | 40 Tubes/Inner box | 5 Inner box/Outer box =12k Units |
| SMD | 1200 Units/Reel | 2 Reels/Inner box | 5 Inner box/Outer box =12k Units |

## Characteristics Curves

FIG.1: Max. Allowable LED Forward Current vs. Ambient Temperature

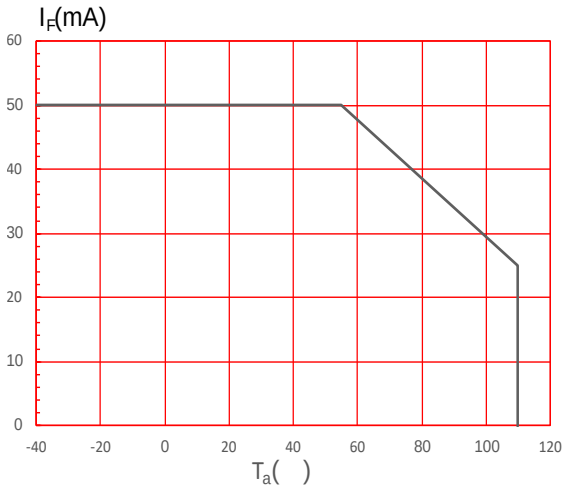


FIG.2: On-state Terminal Current vs. Ambient Temperature

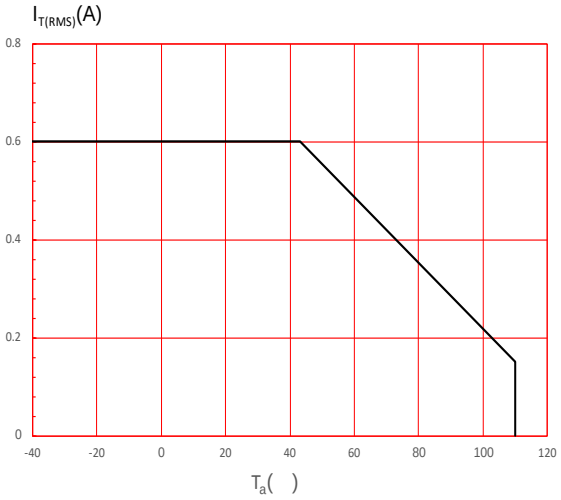


FIG.3:

FIG.7: On-state characteristics

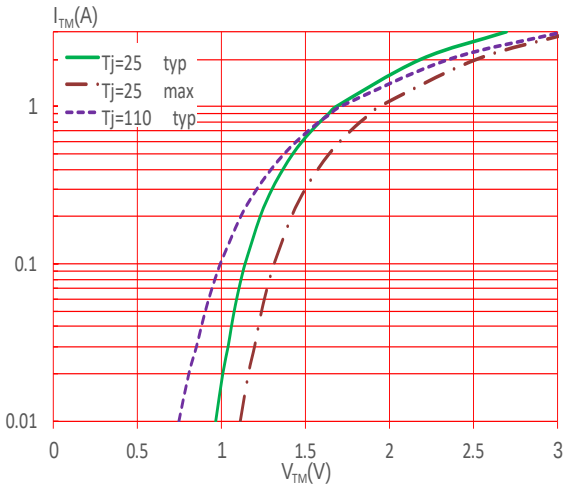


FIG.8: Normalized Holding Current vs. Ambient Temperature

## TEST CIRCUITS

FIG.10: Test Circuits of Turn On Time

FIG.11: Waveforms of Turn On Time

FIG.12: Test circuit for inductive and resistive loads to IEC-61000-4-5 standards

## Package Dimension (Unit: mm)

Standard DIP Type:

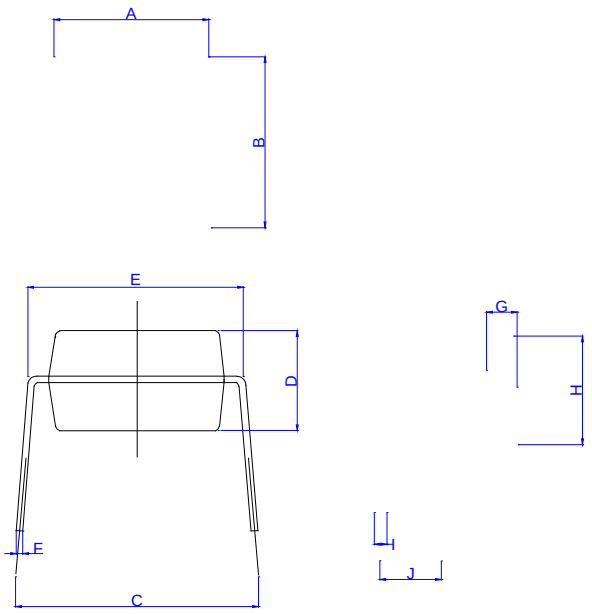


| Ref. | Dimensions | | | | | |
|---|---|---|---|---|---|---|
| | Millimeters | | | Inches | | |
| | Min. | Typ. | Max. | Min. | Typ. | Max. |
| A | | | | | | |
| B | | | | | | |
| C | | | | | | |
| D | | | | | | |
| E | | | | | | |
| F | | | | | | |
| G | | | | | | |
| H | | | | | | |
| I | | | | | | |
| J | | | | | | |

RECOMMENDED SOLDER MASK (Dimensions in mm unless otherwise stated)

Option SMD

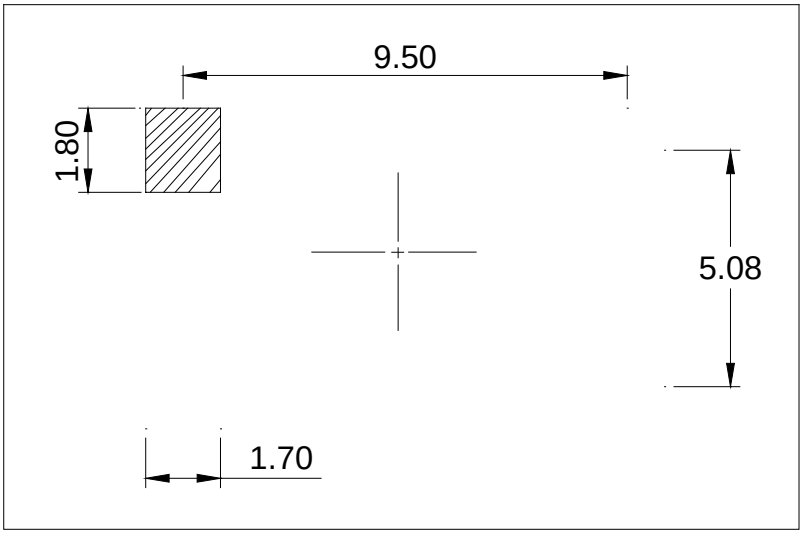

# CARRIER TAPE SPECIFICATIONS (Dimensions in mm unless otherwise stated)

Option T3

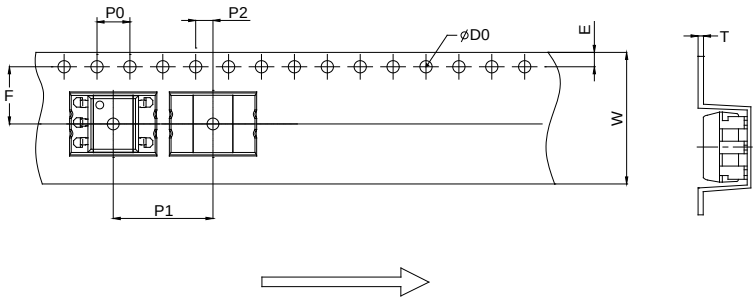


| Ref. | Dimensions | | | | | |
|---|---|---|---|---|---|---|
| | Millimeters | | | Inches | | |
| | Min. | Typ. | Max. | Min. | Typ. | Max. |
| D0 | | 1.50 | 1.60 | | 0.059 | 0.063 |
| P0 | 3.90 | 4.00 | 4.10 | 0.154 | 0.157 | 0.161 |
| P1 | 11.90 | 12.00 | 12.10 | 0.469 | 0.472 | 0.476 |
| P2 | 1.90 | 2.00 | 2.10 | 0.075 | 0.079 | 0.083 |
| E | 1.65 | 1.75 | 1.85 | 0.065 | 0.069 | 0.073 |
| F | 7.40 | 7.50 | 7.60 | 0.291 | 0.295 | 0.299 |
| T | 0.35 | 0.40 | 0.45 | 0.014 | 0.016 | 0.018 |
| W | 15.70 | 16.00 | 16.30 | 0.618 | 0.630 | 0.642 |

## WAVE SOLDERING

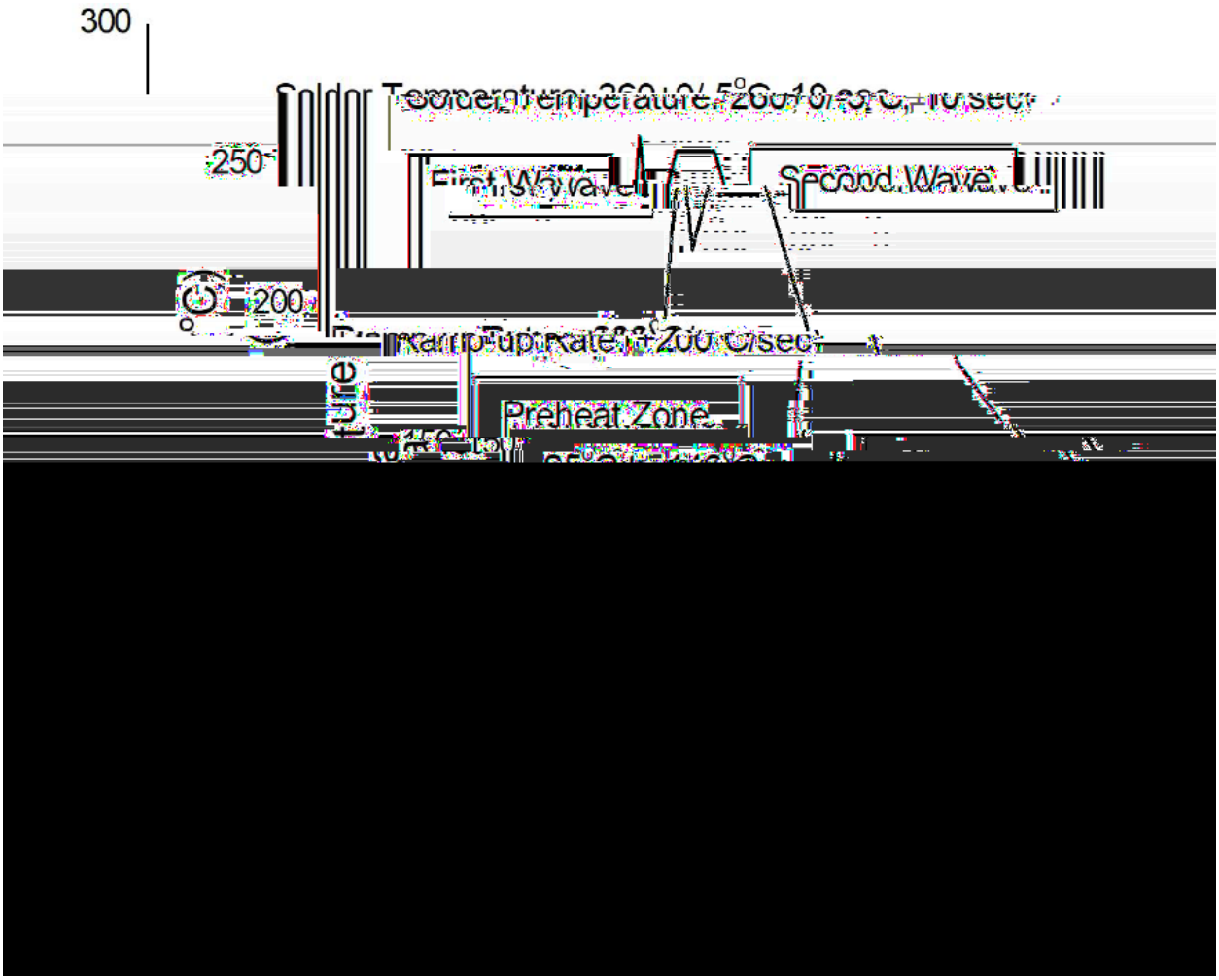


| HANDSOLDERING BY SOLDERING IRON | |
|---|---|
| Soldering Temperature | 360 5℃ |
| Soldering Time | 3s max. |

Note:

1. Reflow soldering is recommended at the temperatures and times shown, no more than three times.

2. Avoid direct contact between the epoxy body and any tools or surfaces exceeding its maximum storage temperature.

3. Application of pressure on the epoxy body is prohibited at elevated temperatures. In specific scenarios, any applied force must not exceed 2.5N.

4. Ensure the component has cooled to ambient temperature before proceeding with any subsequent manufacturing steps.

5. The component has a shelf life of one year when stored under standard conditions.

6. Recommend storage Temp.: 0~40°C;

Recommend storage humidity: <60%;

MSL level: MSL 1

Information furnished in this document is believed to be accurate and reliable. However, Jiangsu JieJie Microelectronics Co., Ltd. assumes no responsibility for the consequences of use without consideration for such information nor use beyond it. Information mentioned in this document is subject to change without notice, apart from that when an agreement is signed, Jiangsu JieJie complies with the agreement.

Products and information provided in this document have no infringement of patents. Jiangsu JieJie assumes no responsibility for any infringement of other rights of third parties which may result from the use of such products and information. This document supersedes and replaces all information previously supplied.

is a registered trademark of Jiangsu JieJie Microelectronics Co., Ltd.

Copyright © 2026 Jiangsu JieJie Microelectronics Co., Ltd. All rights reserved.