Operating Temperature	T_{opr}	-40~110	
Junction Temperature	T_j	125	
Storage Temperature	T_{stg}	-40~125	
Soldering Temperature	T_{sol}	260	
Peak pulse voltage (T_j=25 ; non-repetitive,off-state)	V_{pp}	3	kV

: 100μs pulse, 100Hz frequency
: AC for 1minute, R.H.=40~60%

(Temperature=25°C)

Parameter		Symbol	Condition	Min.	Typ.	Max.	Unit
Input	Forward Voltage	V_F	I_F=10mA	-	1.2	1.5	V
	Reverse Current	I_R	V_R=6V	-	-	1	A
	Peak Off-state						

0.48 124.2 (f210.ur) re68 re .3 (Ir495.48 T6 rrf 0 T4.r)DRM 48 >>BDC -0. <</MCID 52 >>BDC0.52 re68 re .3 ()3 ( )]TJ

Output

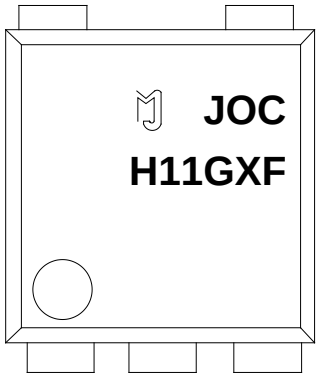
JOC
H11GXF

FIG.1: Max. Allowable LED Forward Current vs. Ambient Temperature

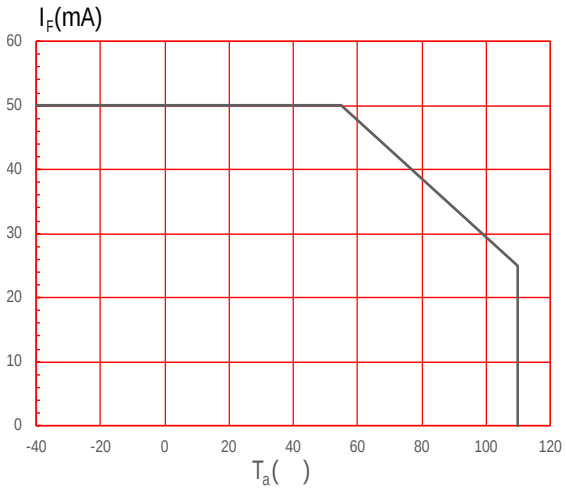

FIG.2: On-state Terminal Current vs. Ambient Temperature

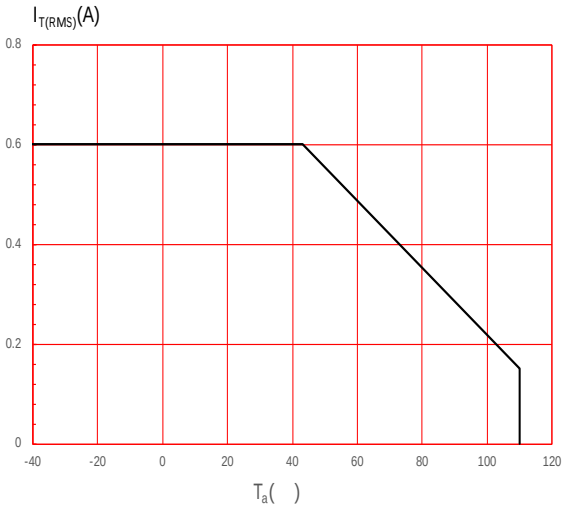

FIG.3: Forward Current vs. Forward Voltage

FIG.4: Forward Voltage vs. Ambient Temperature

FIG.7: On-state characteristics

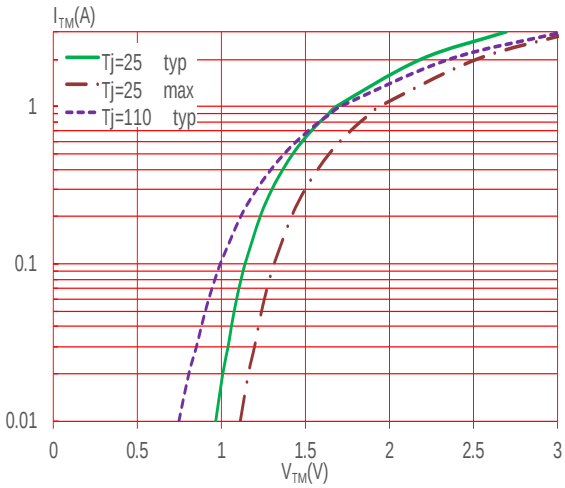

FIG.8: Normalized Holding Current vs. Ambient Temperature

FIG.11: Test Circuits of Turn On Time

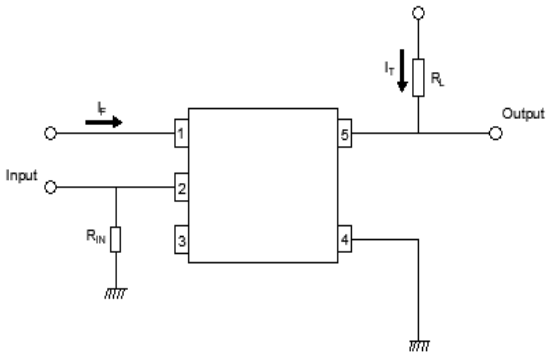

FIG.12: Waveforms of Turn On Time

FIG.13: Test circuit for inductive and resistive loads to IEC-61000-4-5 standards

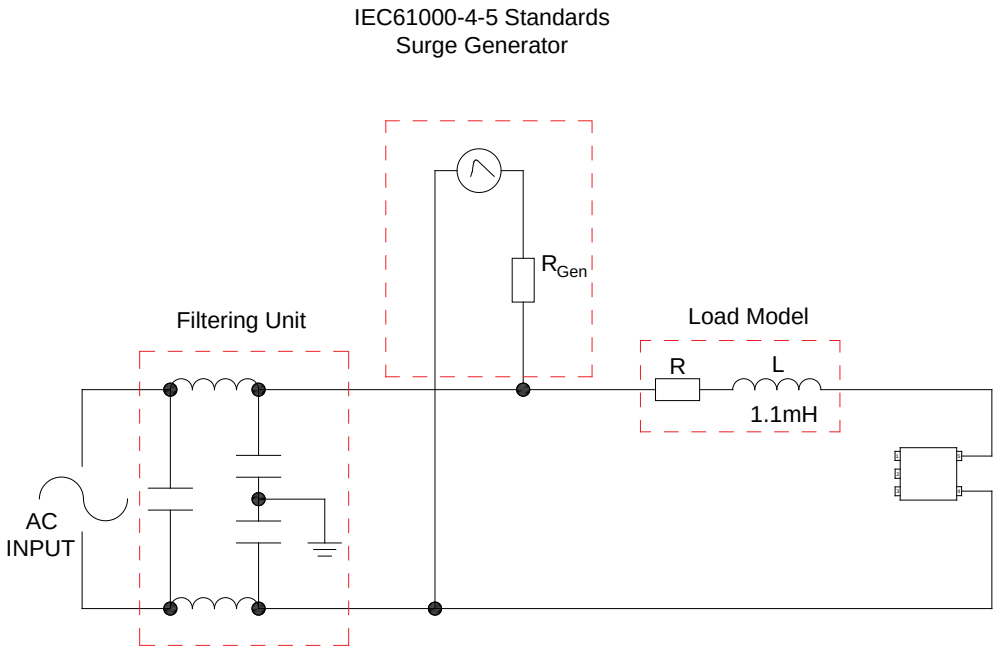

Standard DIP Type:

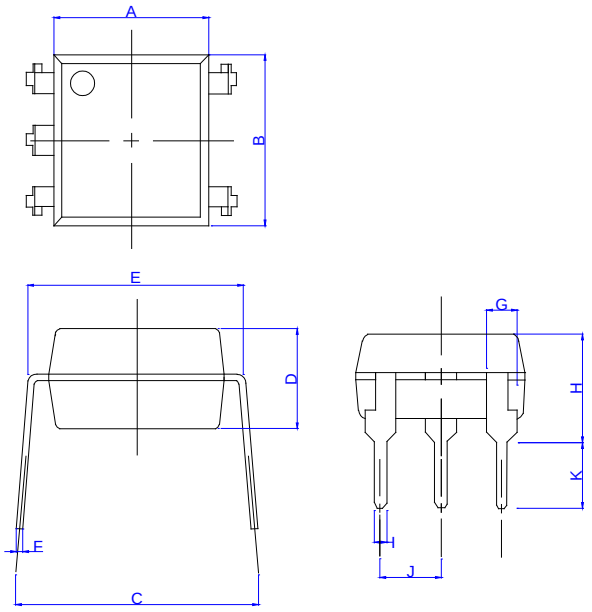

Ref.	Dimensions					
	Millimeters			Inches		
	Min.	Typ.	Max.	Min.	Typ.	Max.
A	6.20		6.60	0.244		0.260
B	6.92		7.32	0.272		0.288
C	7.15		8.95	0.281		0.352
D	3.20		3.60	0.126		0.142
E	7.32		7.92	0.288		0.312
F	0.15		0.35	0.006		0.014
G	1.15		1.35	0.045		0.053
H	3.90		4.50	0.154		0.177
I	0.40		0.60	0.016		0.024
J	2.29		2.79	0.090		0.110
K	2.24		3.24	0.088		0.128

Option SMD Type:

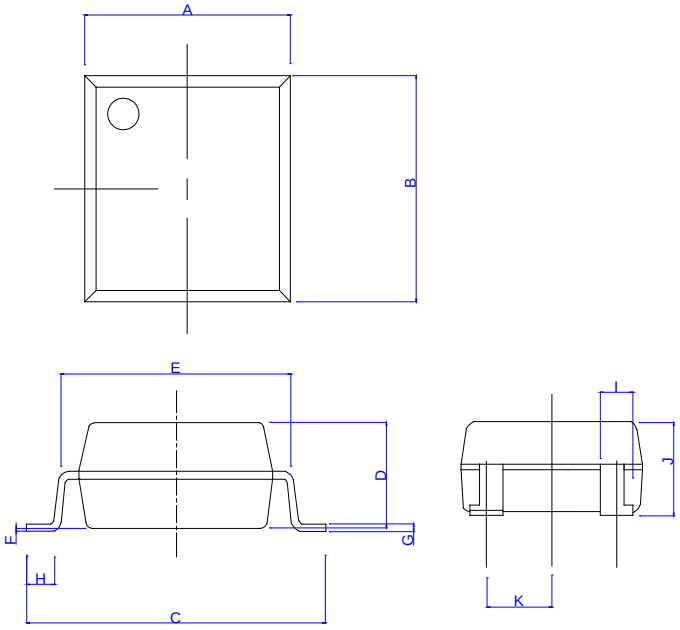

Ref.	Dimensions					
	Millimeters			Inches		
	Min.	Typ.	Max.	Min.	Typ.	Max.
A	6.20		6.60	0.244		0.260
B	6.92		7.32	0.272		0.288
C	9.50		10.50	0.375		0.413
D	3.20		3.60	0.126		0.142
E	7.32		7.92	0.288		0.312
F	0.05		0.35	0.002		0.014
G	0.16		0.36	0.006		0.014
H	0.60		1.40	0.024		0.055
I	0.90		1.50	0.035		0.059
J	3.30		3.90	0.130		0.154
K	2.29		2.79	0.090		0.110

Option SMD

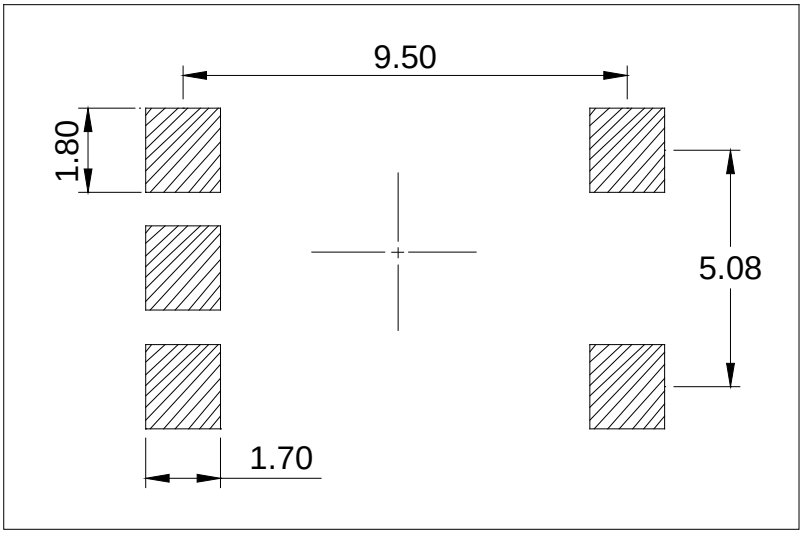

Standard DIP

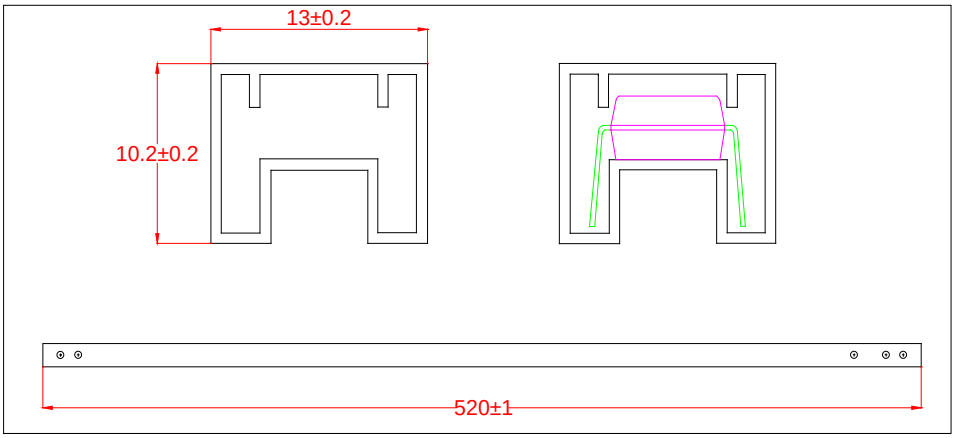

Option T3

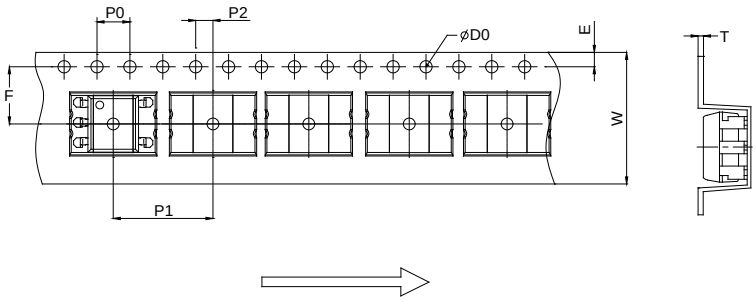

Ref.	Dimensions					
	Millimeters			Inches		
	Min.	Typ.	Max.	Min.	Typ.	Max.
D0		1.50	1.60		0.059	0.063
P0	3.90	4.00	4.10	0.154	0.157	0.161
P1	11.90	12.00	12.10	0.469	0.472	0.476
P2	1.90	2.00	2.10	0.075	0.079	0.083
E	1.65	1.75	1.85	0.065	0.069	0.073
F	7.40	7.50	7.60	0.291	0.295	0.299
T	0.35	0.40	0.45	0.014	0.016	0.018
W	15.70	16.00	16.30	0.618	0.630	0.642

Option T4

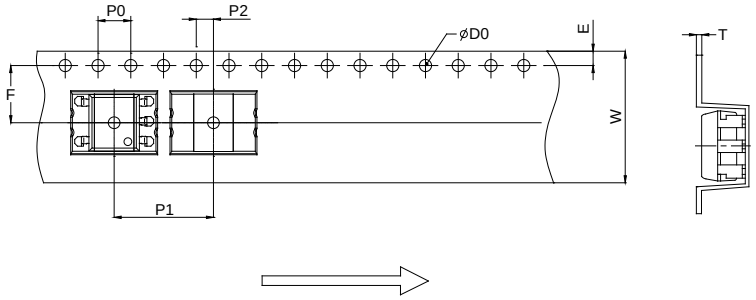

Ref.	Dimensions					
	Millimeters			Inches		
	Min.	Typ.	Max.	Min.	Typ.	Max.
D0		1.50	1.60		0.059	0.063
P0	3.90	4.00	4.10	0.154	0.157	0.161
P1	11.90	12.00	12.10	0.469	0.472	0.476
P2	1.90	2.00	2.10	0.075	0.079	0.083
E	1.65	1.75	1.85	0.065	0.069	0.073
F	7.40	7.50	7.60	0.291	0.295	0.299
T	0.35	0.40	0.45	0.014	0.016	0.018
W	15.70	16.00	16.30	0.618	0.630	0.642

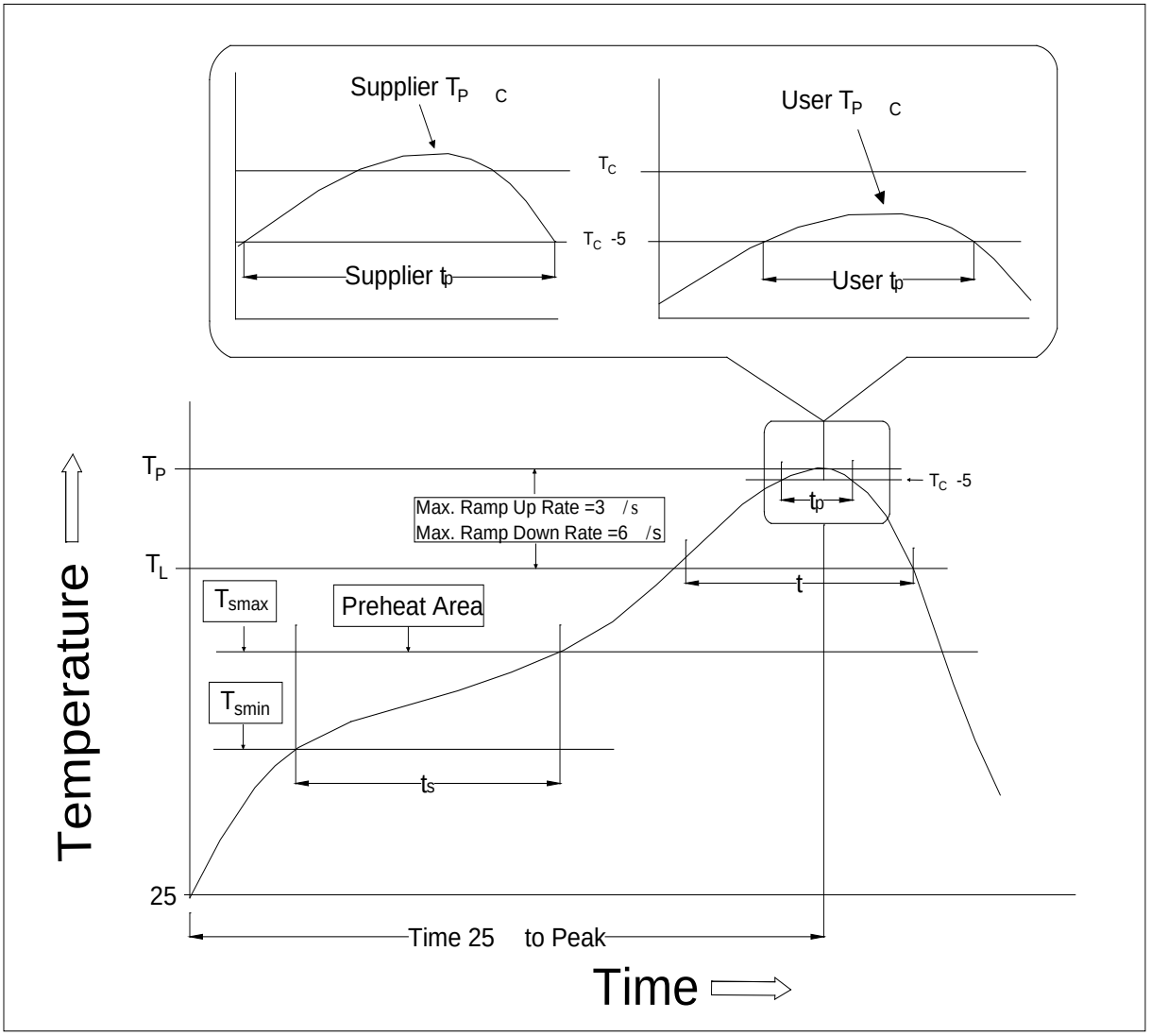

Profile Feature	Sn-Pb Assembly Profile	Pb-Free Assembly Profile
Temperature Min. (Tsmin)	100	150
Temperature Max. (Tsmax)	150	200
Time (ts) from (Tsmin to Tsmax)	60-120 seconds	60-120 seconds
Ramp-up Rate (tL to tP)	3 /second max.	3 /second max.
Liquidus Temperature (TL)	183	217
Time (tL) Maintained Above (TL)	60-150 seconds	60-150 seconds
Peak Body Package Temperature	235 +0 /-5	260 +0 /-5
Time (tP) within 5 of 260	10 seconds	10 seconds
Ramp-down Rate (TP to TL)	3-6 /second	3-6 /second
Time 25 to Peak Temperature	6 minutes max.	8 minutes max.

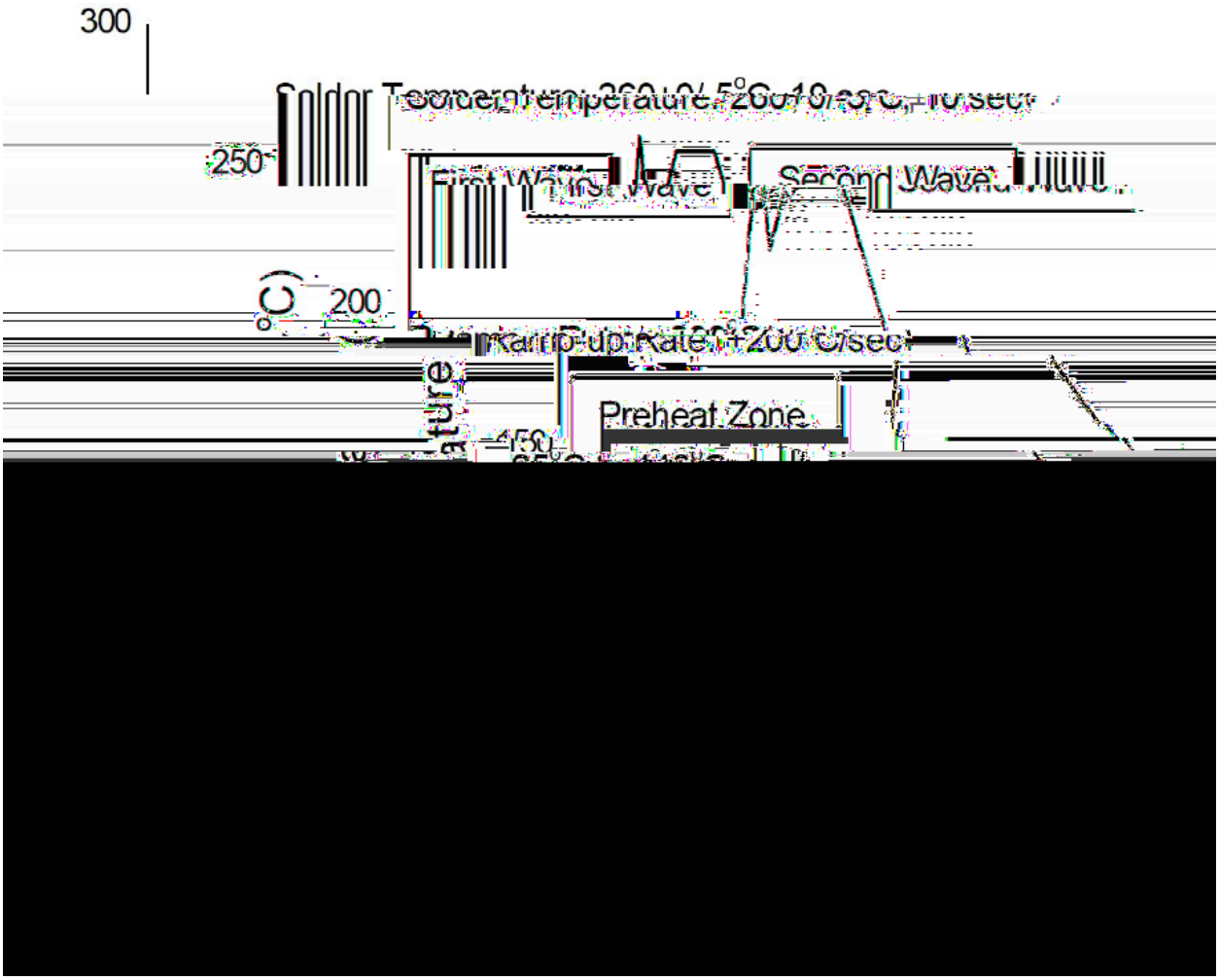

Soldering Temperature	360 ± 5
Soldering Time	3s max.

Note:

1. Reflow soldering is recommended at the temperatures and times shown, no more than three times.

2. Avoid direct contact between the epoxy body and any tools or surfaces exceeding its maximum storage temperature.

3. Application of pressure on the epoxy body is prohibited at elevated temperatures. In specific scenarios, any applied force must not exceed 2.5N.

4. Ensure the component has cooled to ambient temperature before proceeding with any subsequent manufacturing steps.

5. The component has a shelf life of one year when stored under standard conditions.

6. Recommend storage Temp.: 0~40°C;

Recommend storage humidity: <60%;

MSL level: MSL 1

Information furnished in this document is believed to be accurate and reliable. However, Jiangsu JieJie Microelectronics Co., Ltd. assumes no responsibility for the consequences of use without consideration for such information nor use beyond it. Information mentioned in this document is subject to change without notice, apart from that when an agreement is signed, Jiangsu JieJie complies with the agreement.

Products and information provided in this document have no infringement of patents. Jiangsu JieJie assumes no responsibility for any infringement of other rights of third parties which may result from the use of such products and information. This document supersedes and replaces all information previously supplied.

is a registered trademark of Jiangsu JieJie Microelectronics Co., Ltd.

Copyright © 2026 Jiangsu JieJie Microelectronics Co., Ltd. All rights reserved.