JMD165KD16T2A

Diode Module

Features

Product Summary

Parameter	Value	Unit
℃		

Applications



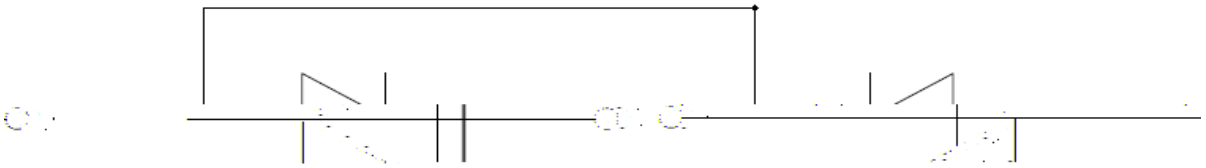

Absolute Maximum Ratings

Parameter	Conditions	Symbol	Values	Unit
	℃			

Electrical Characteristics

Parameter	Conditions	Symbol	Values			Unit
			Min.	Typ.	Max.	
	℃					
	℃					
	℃					
						Ω

Thermal Characteristics

Parameter	Conditions	Symbol	Values			Unit
			Min.	Typ.	Max.	

Ordering Information

Device	Marking	Package	Weight	Inner Box	Per Carton

Typical Electrical & Thermal Characteristics

FIG.1: Forward characteristics(per diode)

FIG.2: Peak on-state surge current

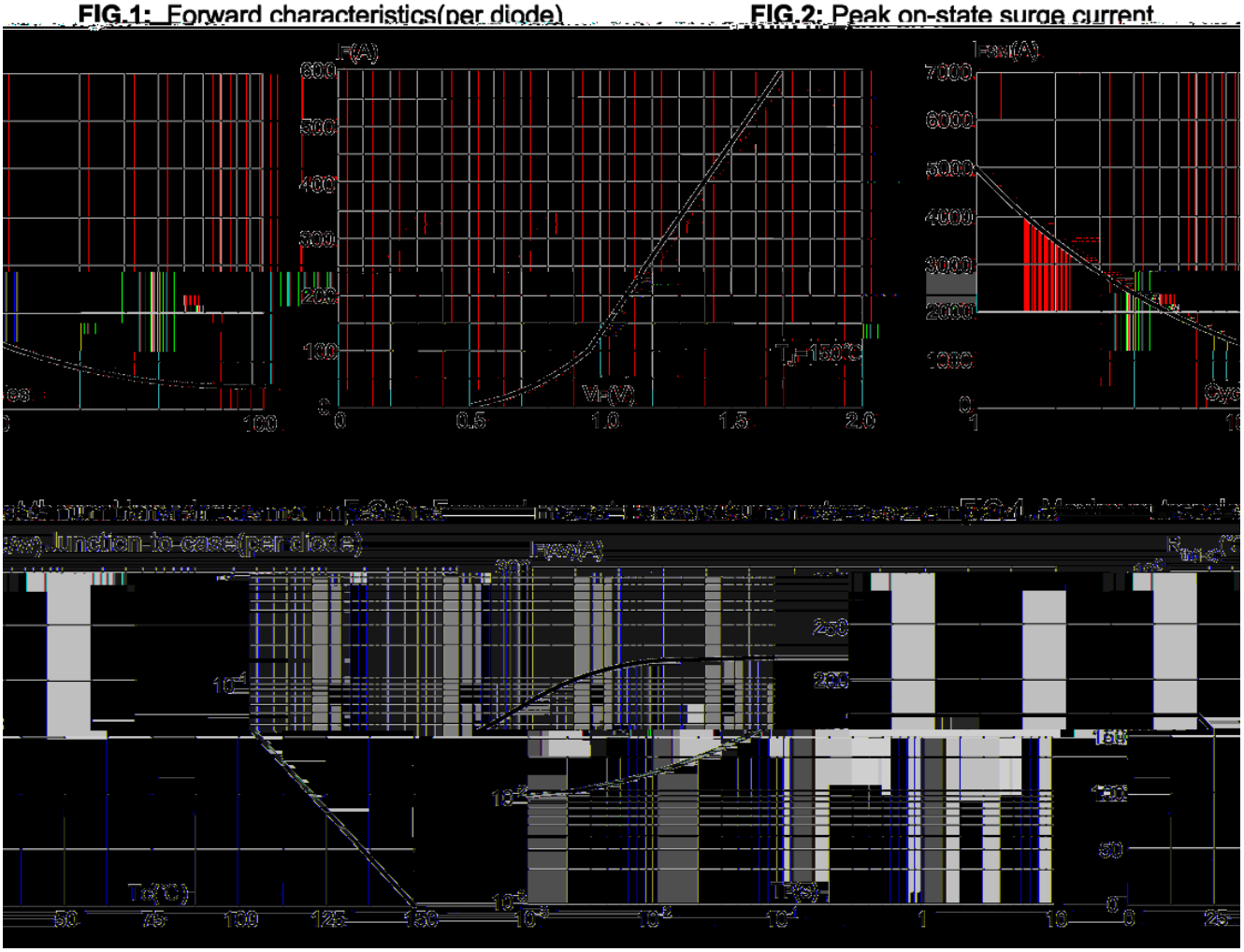

junction-to-case(per diode)

Circuit Diagram

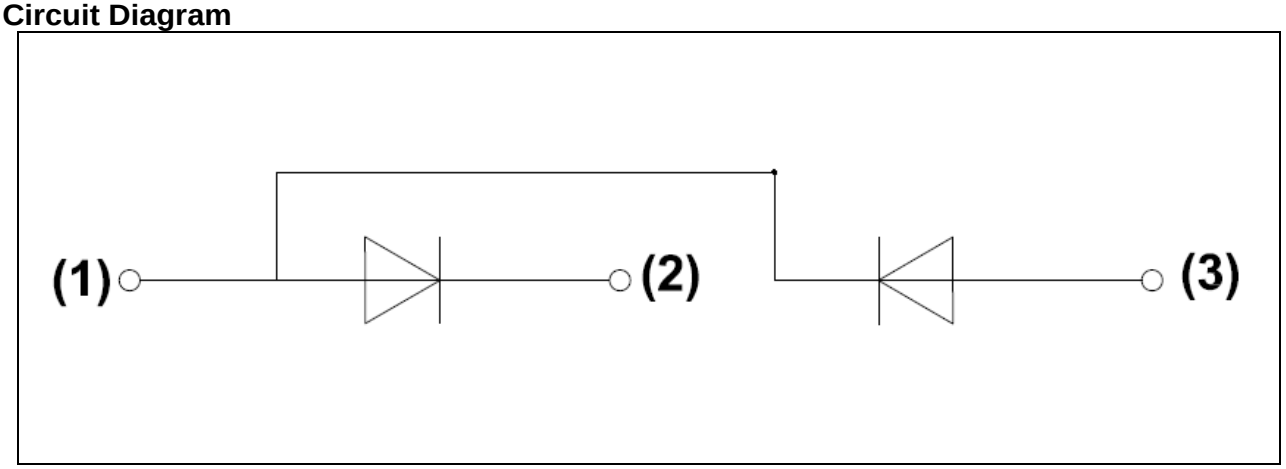

Package Outlines (mm)

