E E KB

JKHI

&HE K J) KCC HD

& H C J H	BK	D J
℃		

FFB JEDI



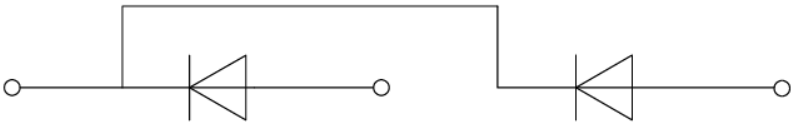

I EBKJ C KC (JD I

& H C J H	ED JEDI	) OC EB	BK I	D J
	℃			

B JH B H J HI J I

& H C J H	ED JEDI	) OC EB	BK I			DJ
			D	OF		

OF B B JH B HC B H J HI J I

FIG.1: Forward characteristics(per diode)

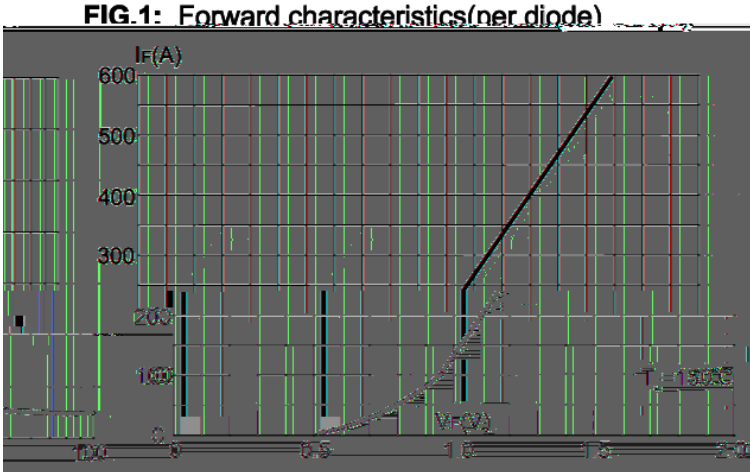

FIG.2: Peak on-state surge current

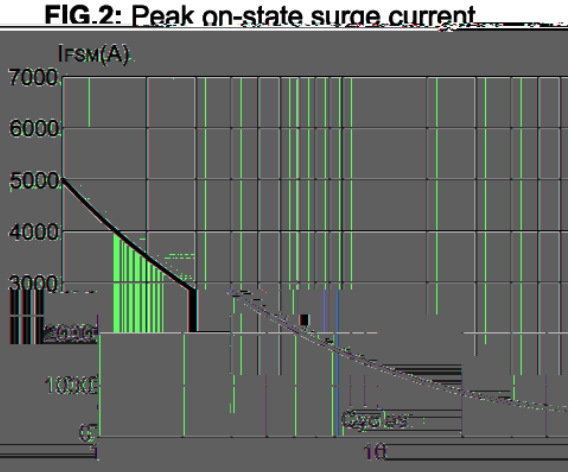

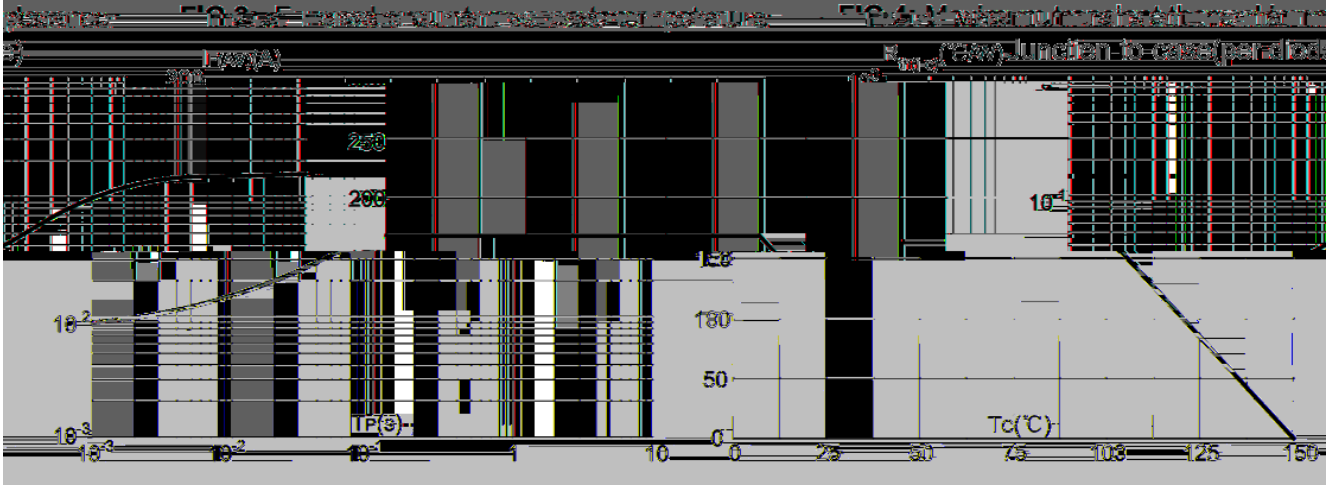

H K J H C

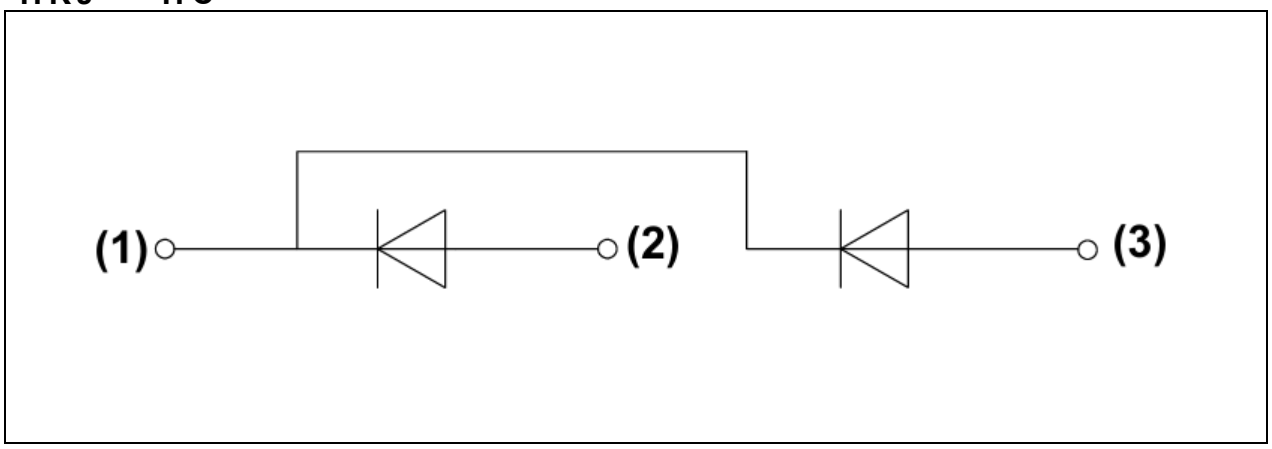

& A KJBD I CC

