
	℃			

	℃					
	℃					
	℃					
						Ω

FIG.1: Forward characteristics(per diode)

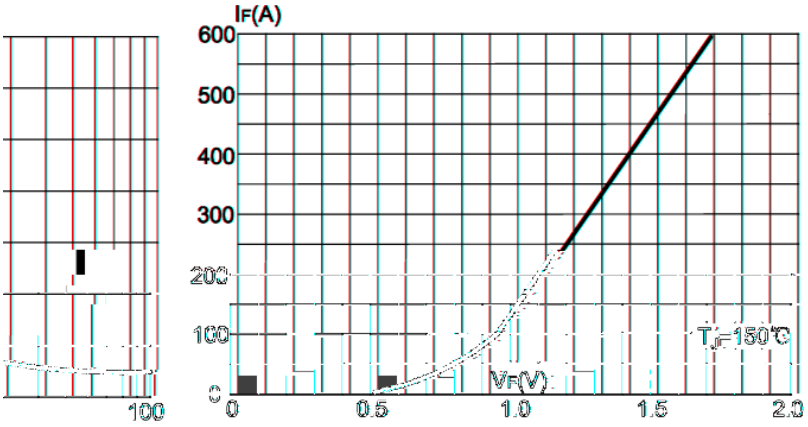

FIG.2: Peak on-state surge current

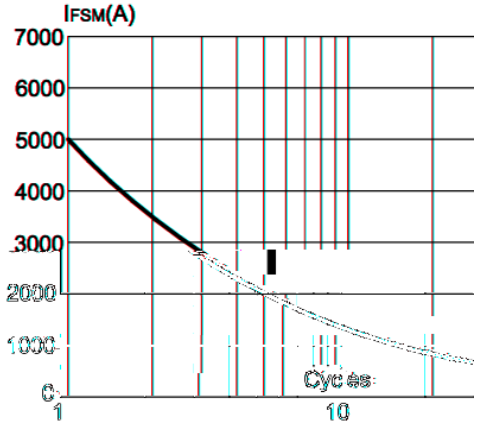

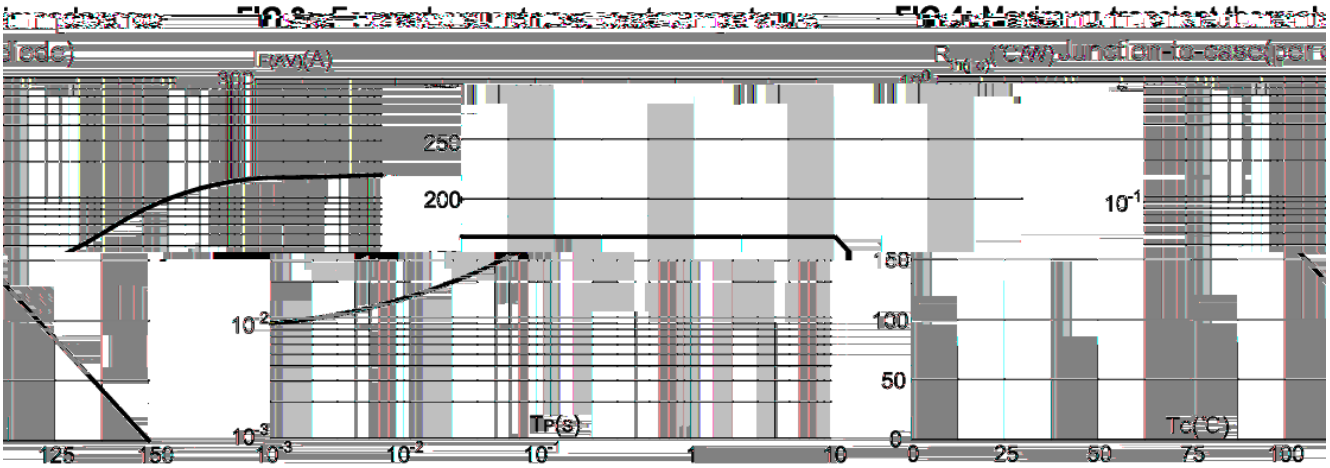

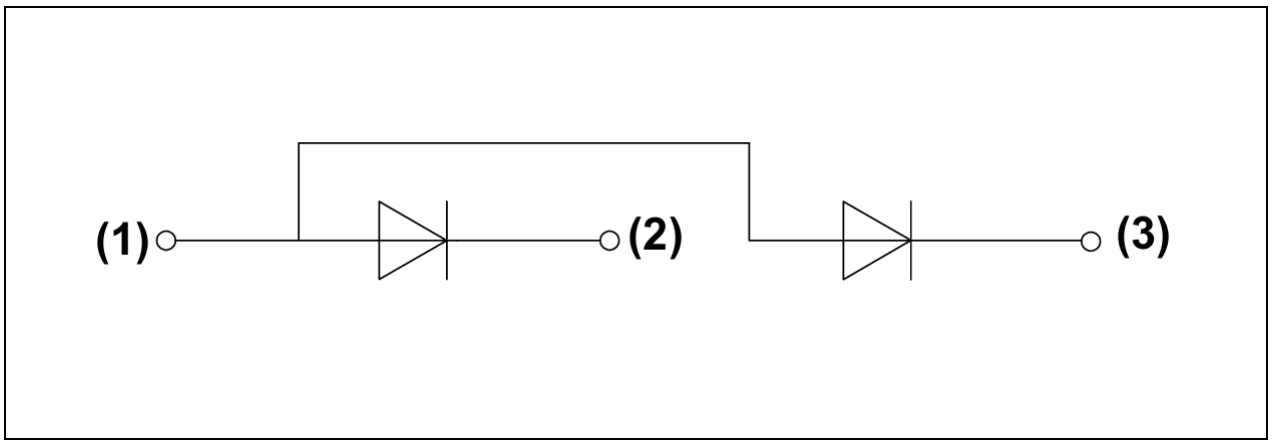

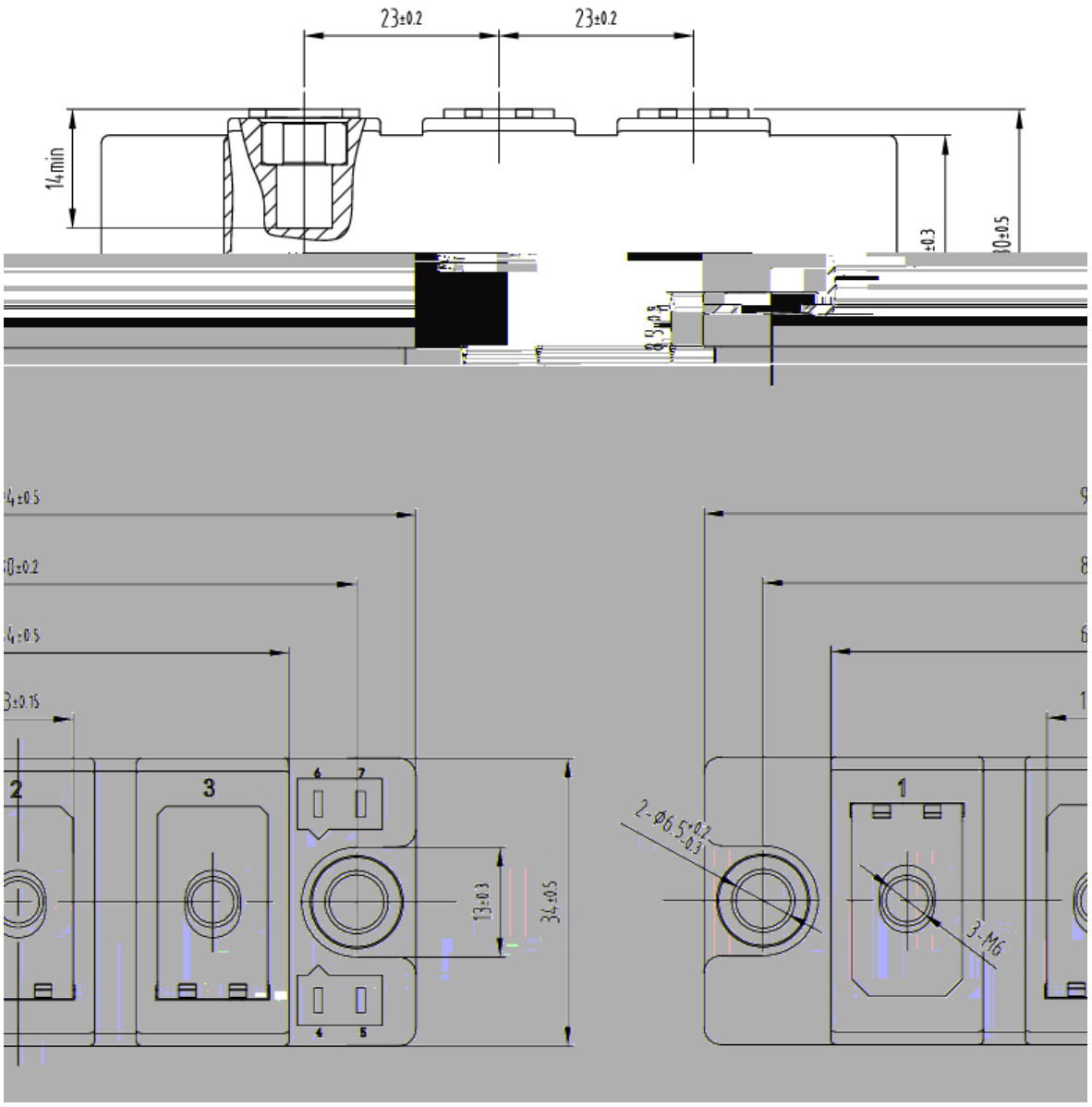
23±0.2
23±0.2
14min
2
3
1
13±0.3
34±0.5
2-Ø6.5
3-M6