℃		



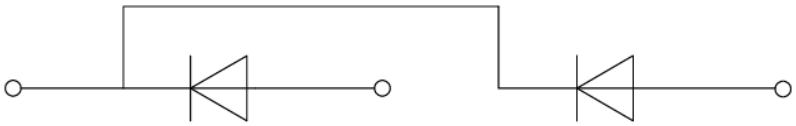

	℃			

	℃					
	℃					
	℃					
						Ω

FIG.1: Forward characteristics(per diode)

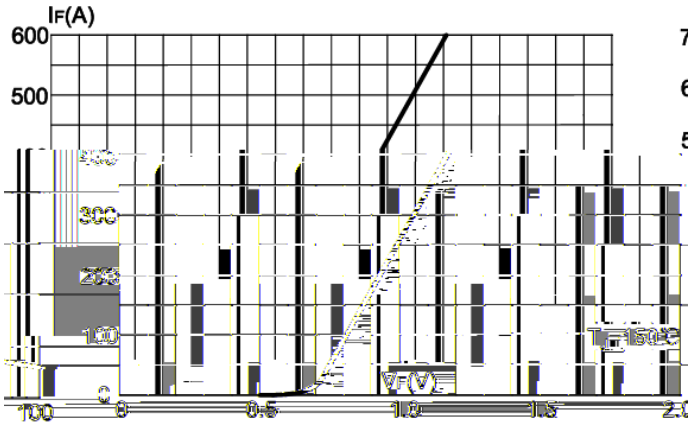

FIG.2: Peak on-state surge current

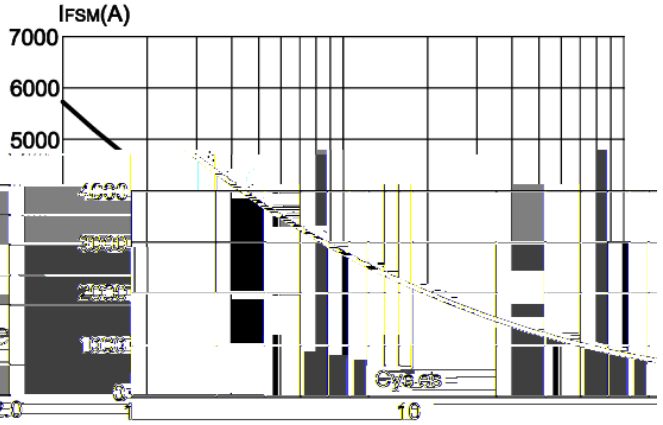

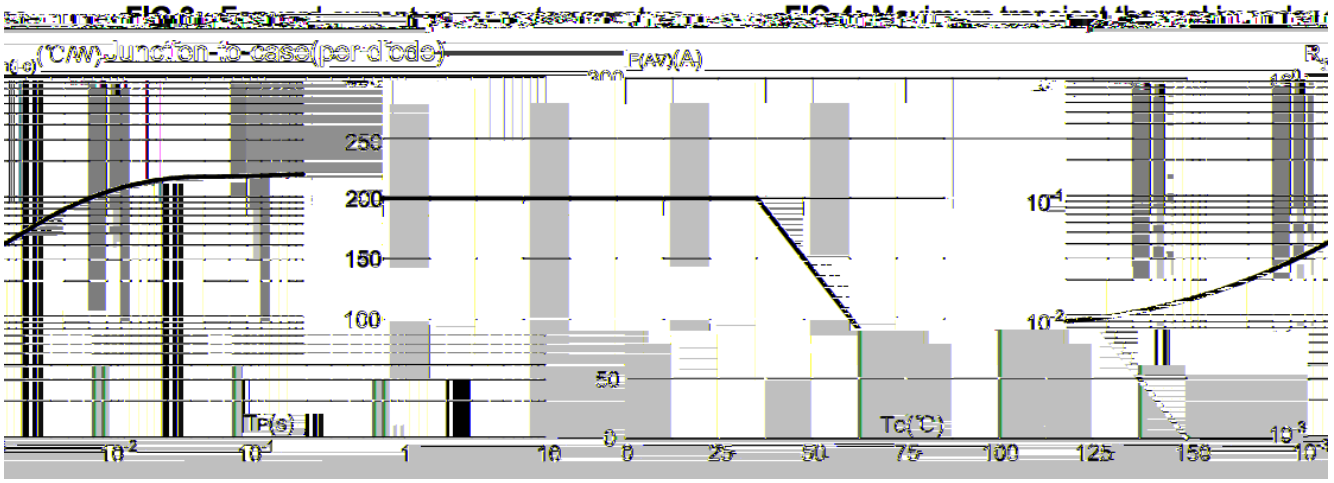

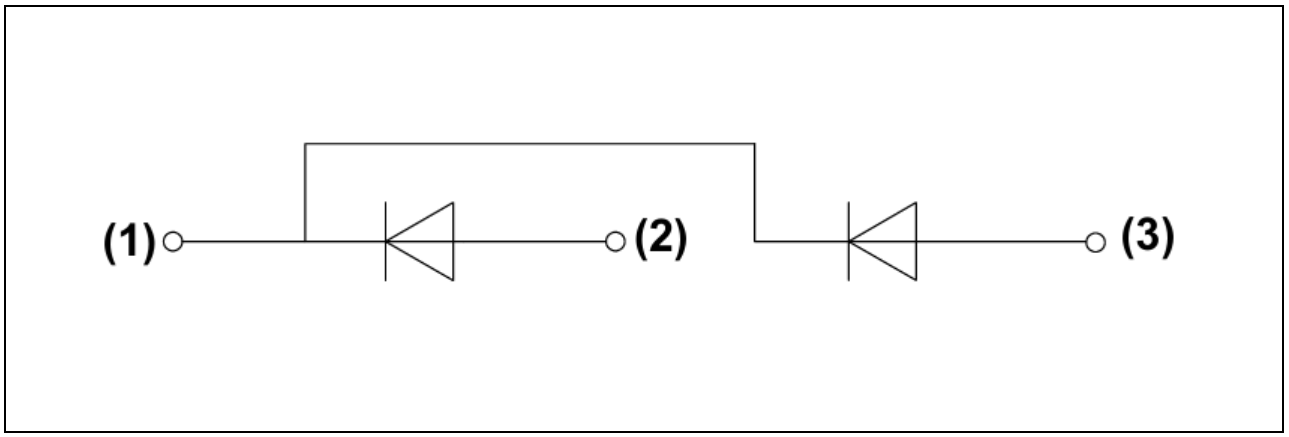

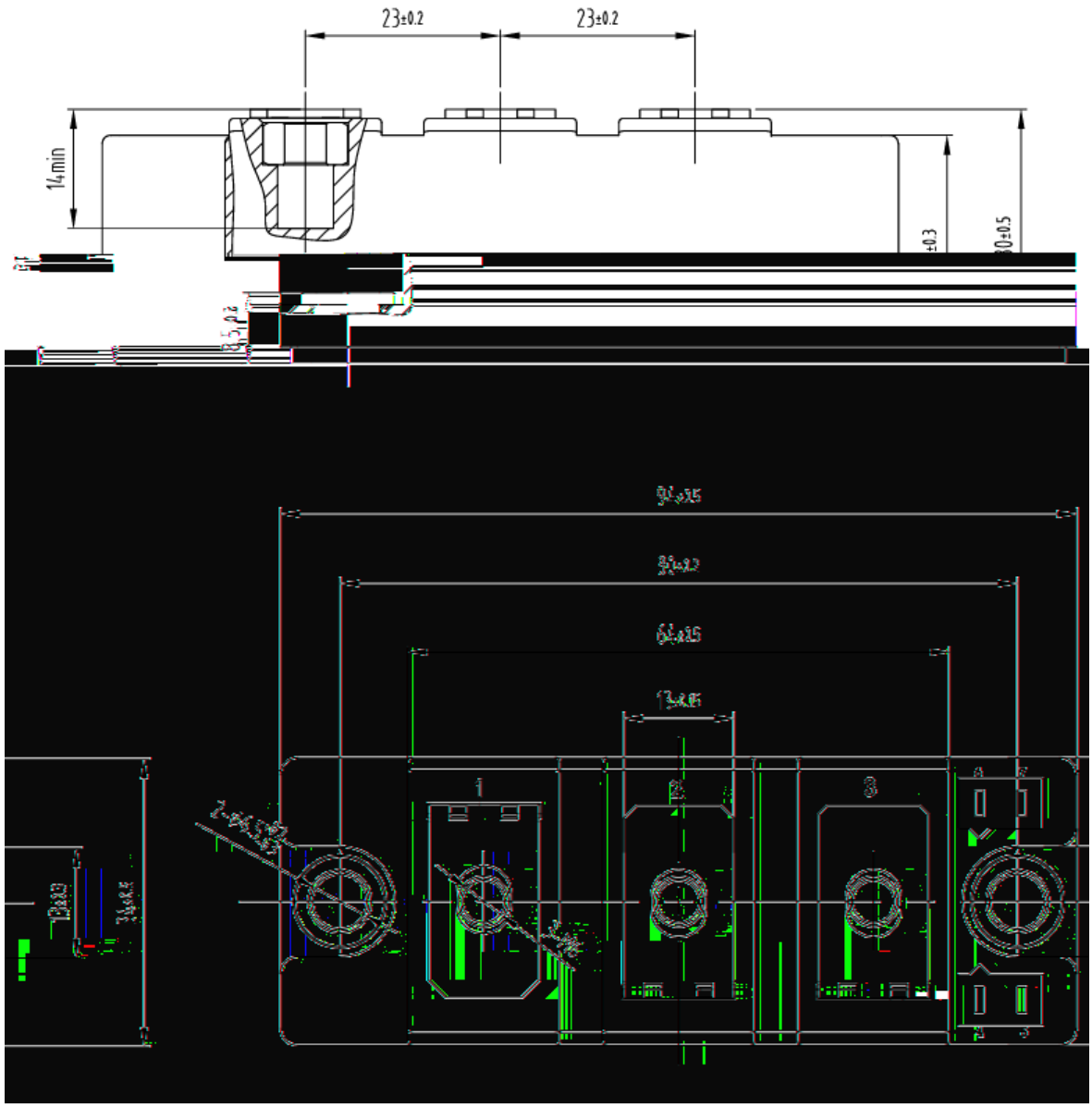
23±0.2
23±0.2
14 min
±0.3
±0.5