-/ -31 2 1 1 2 0 01

1- - 2l 4 34- - /1 - / - 0

1 - . - 1

1 0 3 . -/ 1 0 3 1/4 3

4/4 01 434 1 -.

"		"
" ℃		
" -		"

/ 1 1

1 1



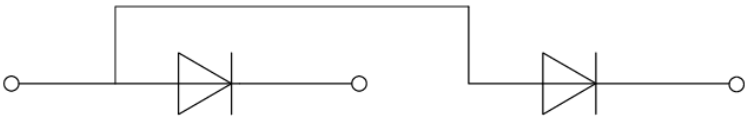

1 41 1 1/ 210

1 1 1 1- 1 1 1 -31		"		"
1 1 1 1- 1 1 1 -31		"		"
1 -31 2 - 0 / 1		"		
- 0 31 / 1	/ / 1 1 - 1 ℃			
- 1 2 2 3				
- -31		"		"
/ 1 1 - 1 - 31				
-31 1 1 - 1 - 31		3		

1 41 1 1/ 210

1- 2 - 0 -31		"				"
1 1 1 1- -31 / 1	" " ℃					
	" " ℃					
4 1 4 0 -31	℃ 2 1 /- / -	"				"
- / 1 - /1						Ω

1 41 1 1/ 210

41 - 1 - /1 / /- 1	1 0 01	4 /				
41 - 1 - /1 /- 1 41-	1 0 1	4 /				
3 1	0 1 - 0 41- 2 10 1					
	1/ 01 / 1/ 1 / 1					

			3		

FIG.1: Forward characteristics(per diode)

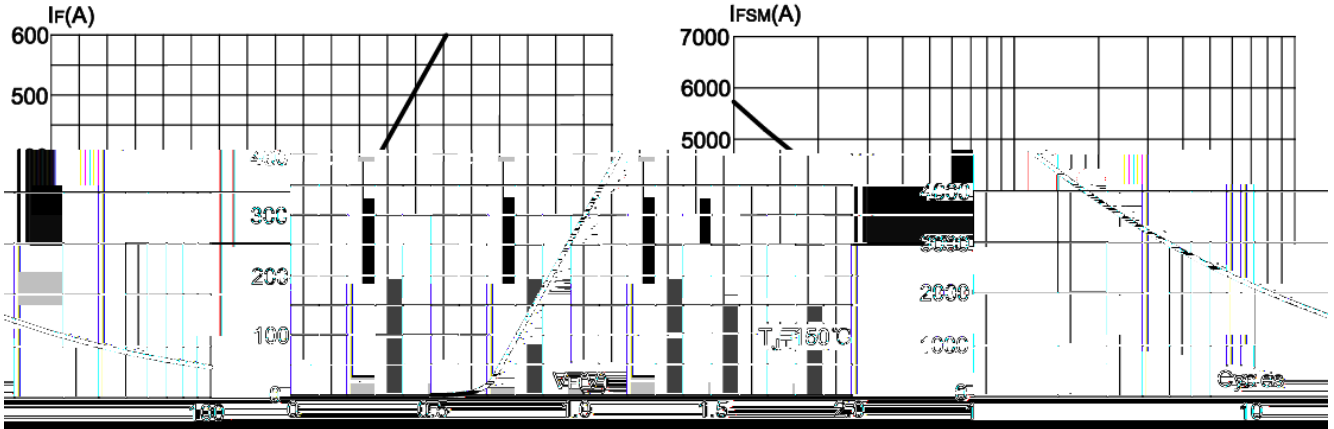

FIG.2: Peak on-state surge current

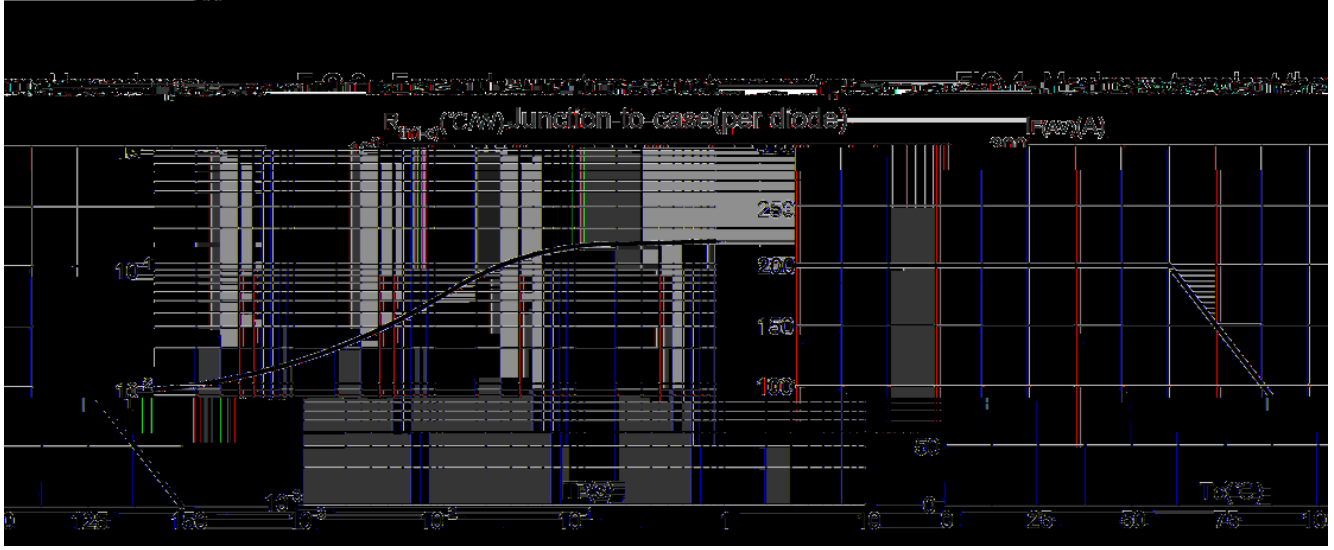

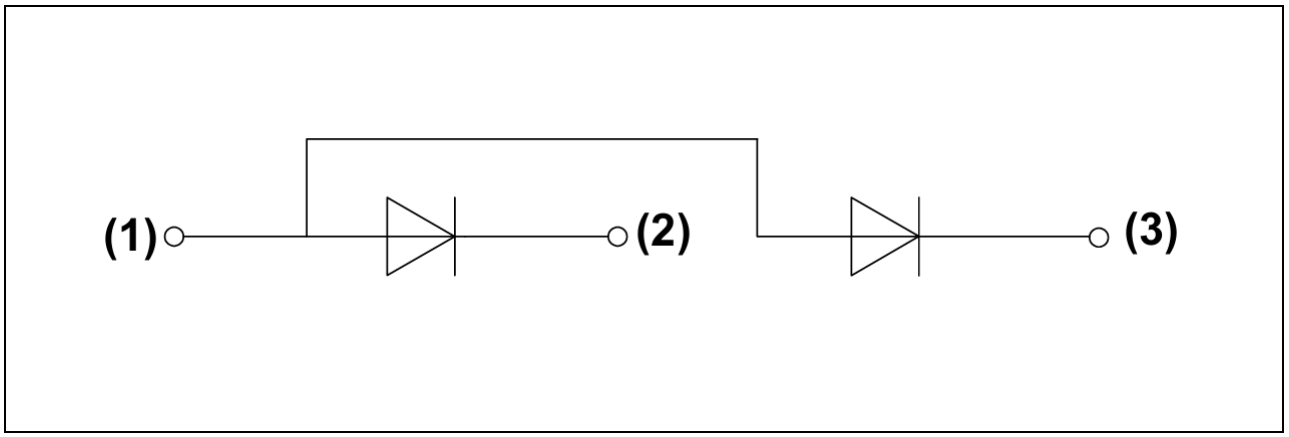

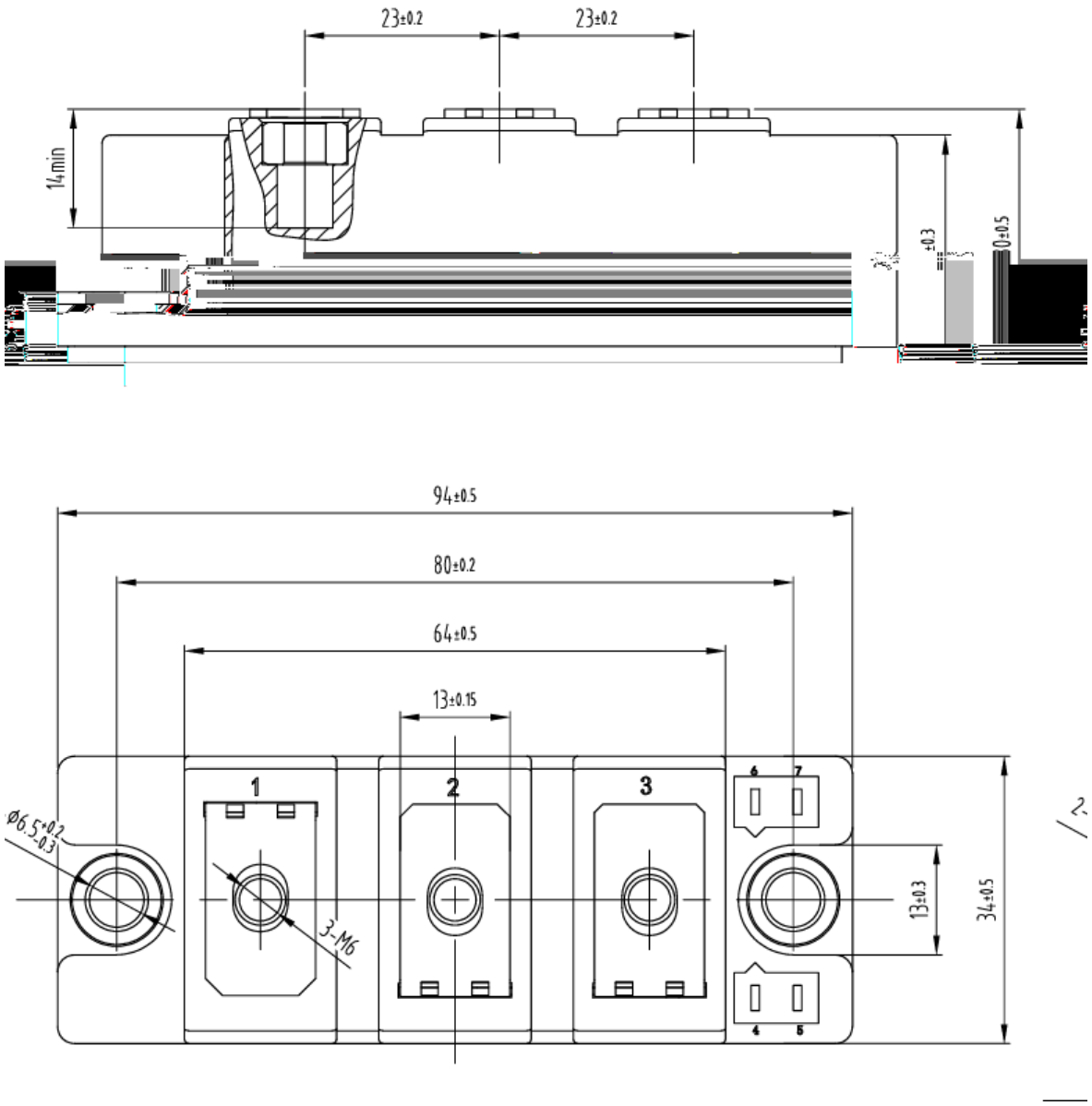
23±0.2
23±0.2
14min
±0.3
0±0.5
94±0.5
80±0.2
64±0.5
13±0.15
1
2
3
6
7
4
5
Ø6.5+0.2 -0.3
3-M6
13±0.3
34±0.5

! 2 1- 1 1

2 - 2 410 4 0 / 1 .1 1 10 .1 -// - 1 - 0 1 -. 1 1 1
- 3 1 1 1 / 0 / 0 - 1 1 . 2 41 / 1 1 /1 2 1
4 / 01 - 2 /4 2 - 1 .1 0 4 2 - 4 0 / 1
. 1/ /4- 31 4 /1 4 - 0 3 4 - 3 1 1 2 /
4 41 1 10 - 3 10 -3 11 1 0 / - 0 2 - 010 4
0 / 1 4- 1 2 31 1 2 - 1 - 3 1 1 - 1 1 . 2 -
2 31 1 2 41 34 2 4 0 - 1 4 /4 - 1 2 41 1 2 /4 0 / - 0
2 - 4 0 / 1 41 - 1 1- 1 0- 10 3 4 0 / 1
1 101 - 0 1 -/1 - 2 - 1 10

13 1 10 -01 - 2 - 3 1 1 1 / 0 / - 3 1 1
1 / 0 / 0 34 1 1 10