JMD200ND18T2A

Features

Product Summary

Applications

Absolute Maximum Ratings

Electrical Characteristics

Parameter	Conditions	Symbol	Values			Unit
			Min.	Typ.	Max.	
	℃					
	℃					
	℃					
						Ω

Thermal Characteristics

Parameter	Conditions	Symbol	Values			Unit
			Min.	Typ.	Max.	

Ordering Information

Device	Marking	Package	Weight	Inner Box	Per Carton

Typical Electrical & Thermal Characteristics

FIG.1: Forward characteristics(per diode)

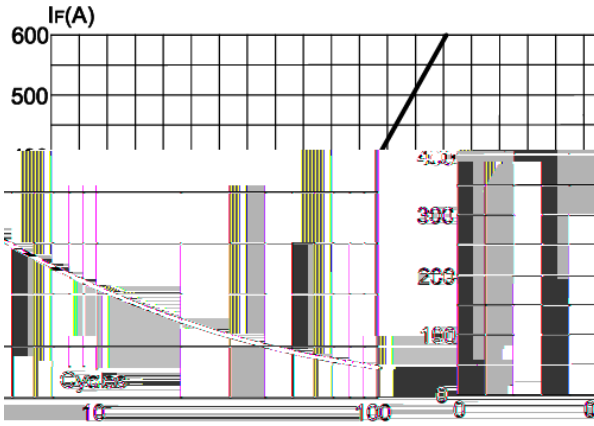

FIG.2: Peak on-state surge current

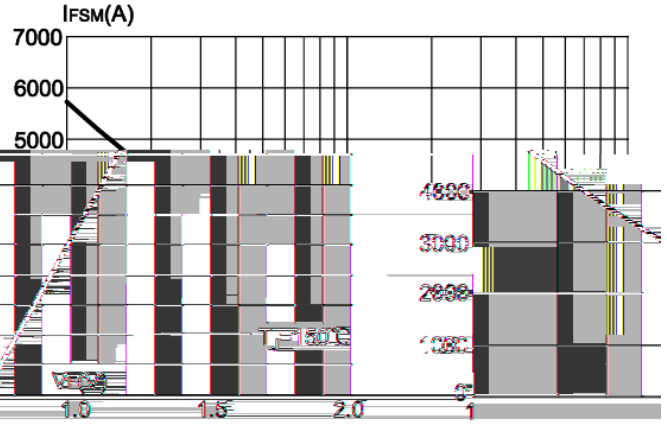

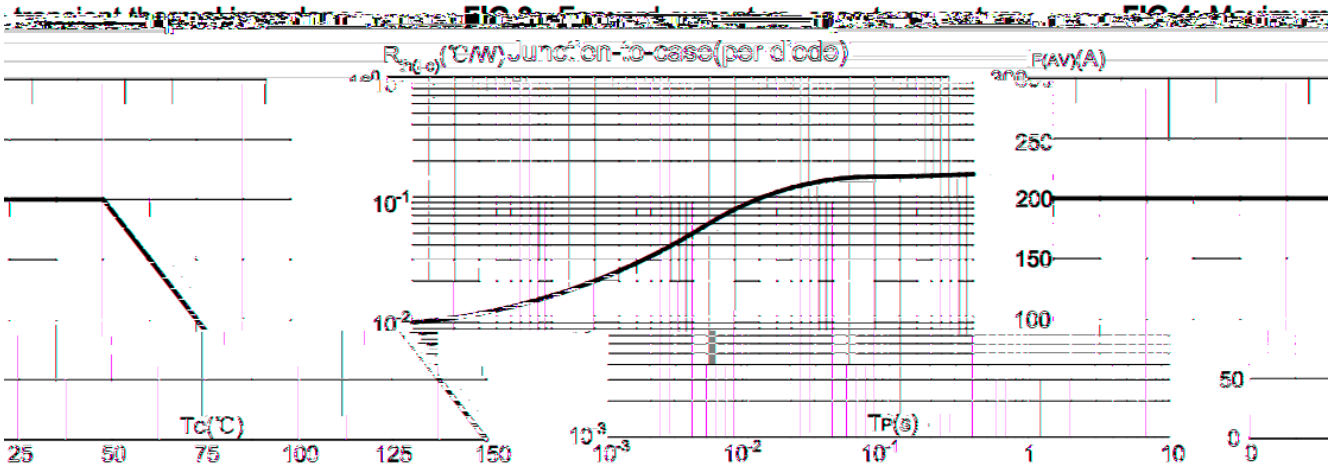

Circuit Diagram

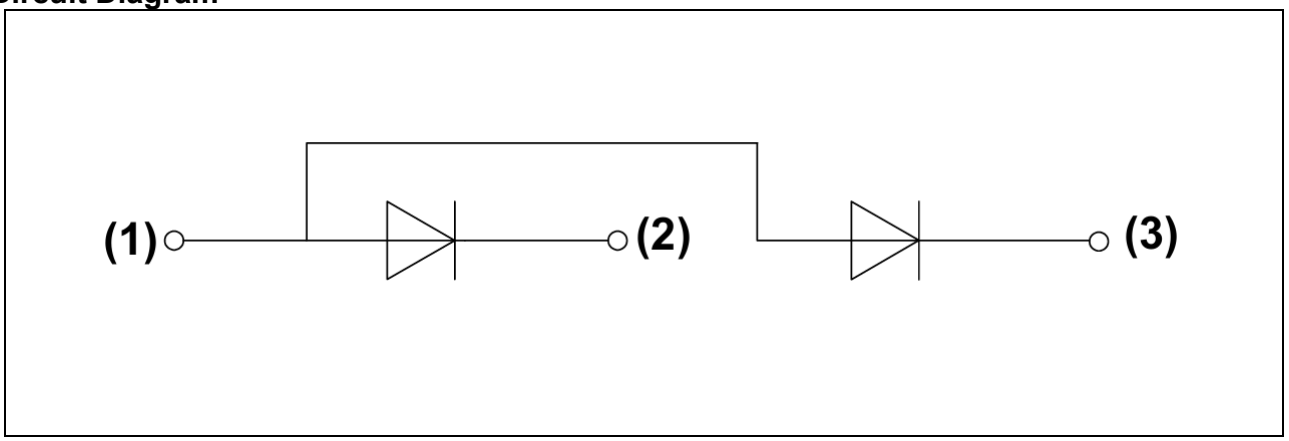

Package Outlines (mm)

