0

			B		B	
,	,	2				2
.	2. 2. .) 0 ℃	. .)				
	2. 2. .) 0 ℃					
0	0 ℃	20+				2
		0				Ω

0

			B		B	
0		.				3
0		.				3
)	))	)				
	)					

D

	B				
) 0	) 0	0	, /	, /	, /

) (

. ,

FIG.1: Forward characteristics(per diode)

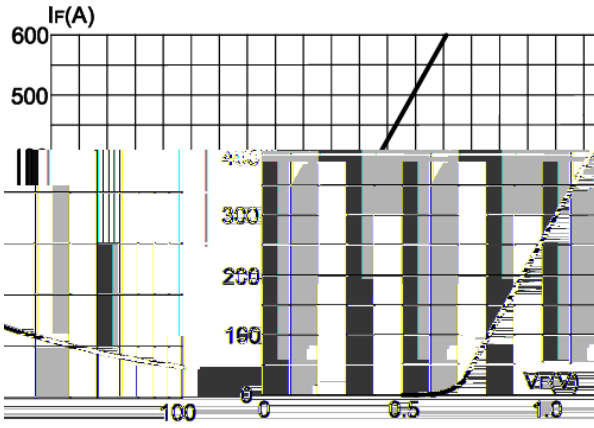

FIG.2: Peak on-state surge current

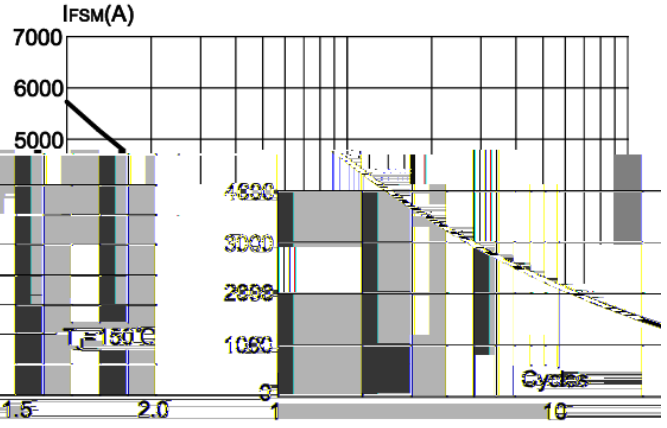

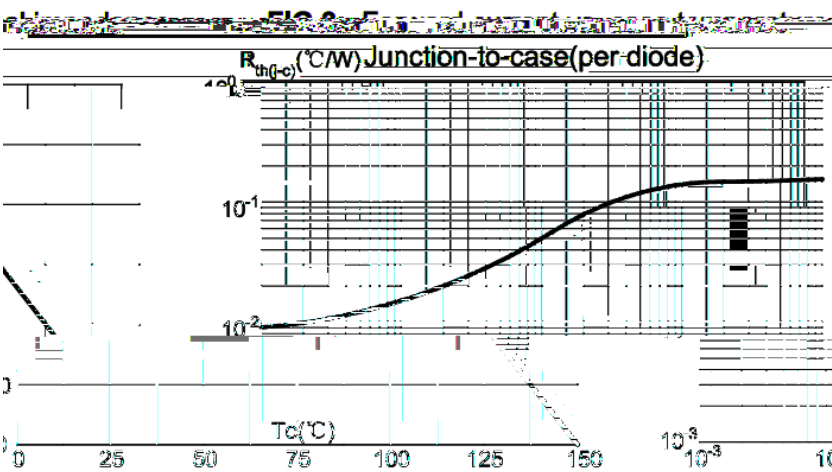

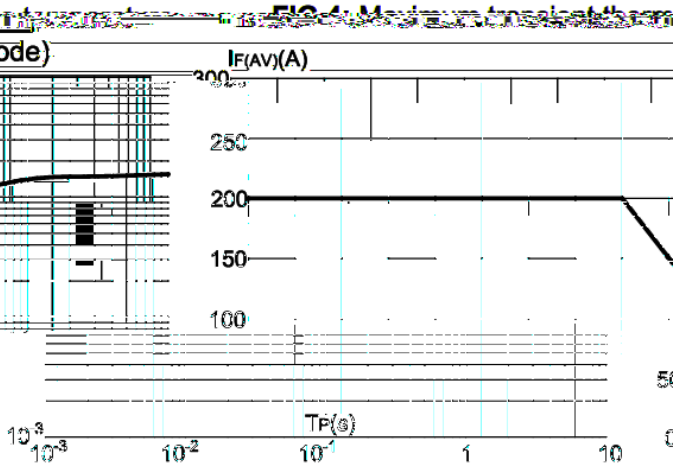

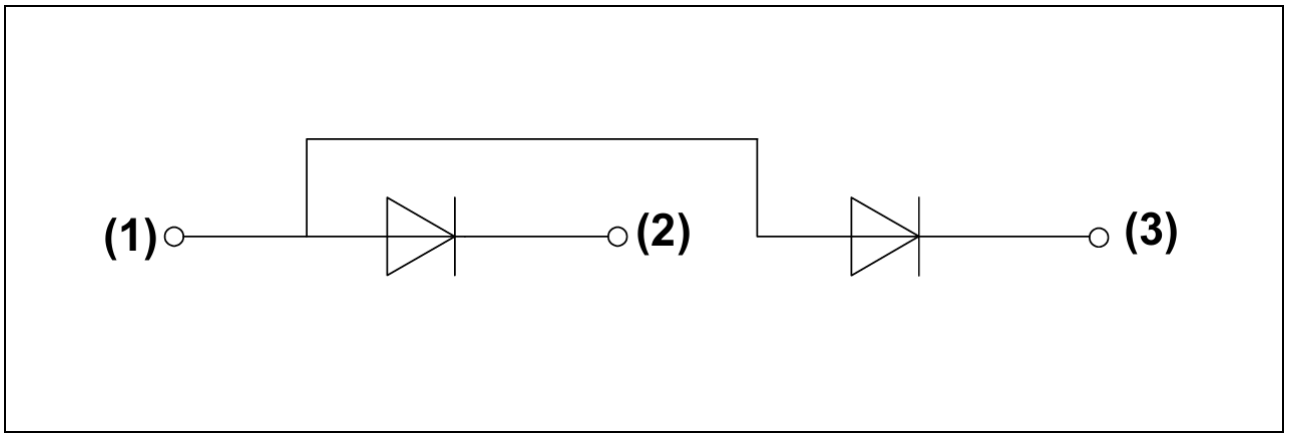

B C

D

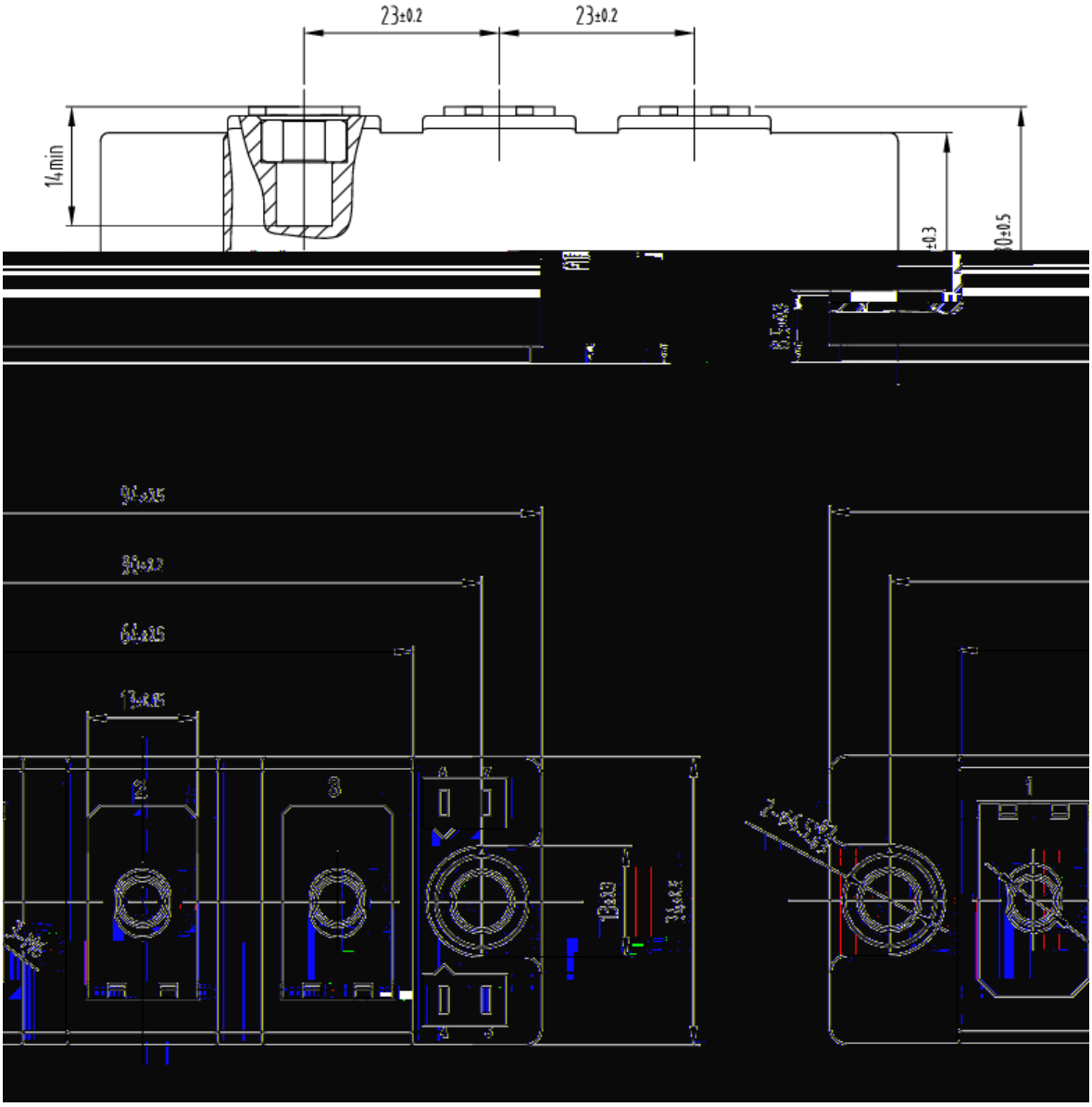

1

) (

. ,

/ (

0

,

0 0

/ (

/ (

) (

. ,