&MVDUSJDBM I BSBDUFSJTUJDT

1BSB FUFS	POEJUPOT	CPM	BMWFT			6OJU
			. JO	5	. BY	
	℃					
	℃					
	℃					
						Ω

5I FS BM I BSBDUFSJTUJDT

1BSB FUFS	POEJUPOT	CPM	BMWFT			6OJU
			. JO	5	. BY	

5 JDBM&MDUS&DBM 5IFS BM IBSBDUFSJTUJDT

FIG.1: Forward characteristics(per diode)

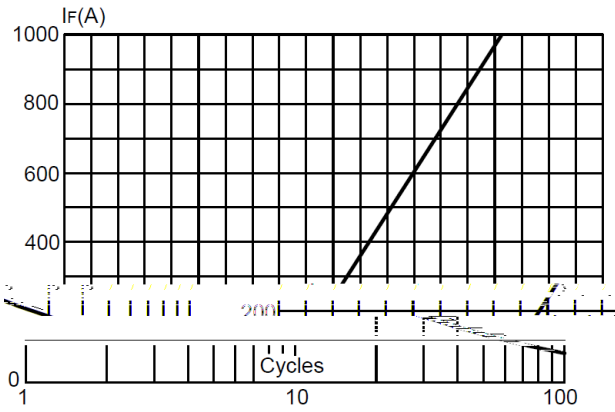

FIG.2: Peak on-state surge current

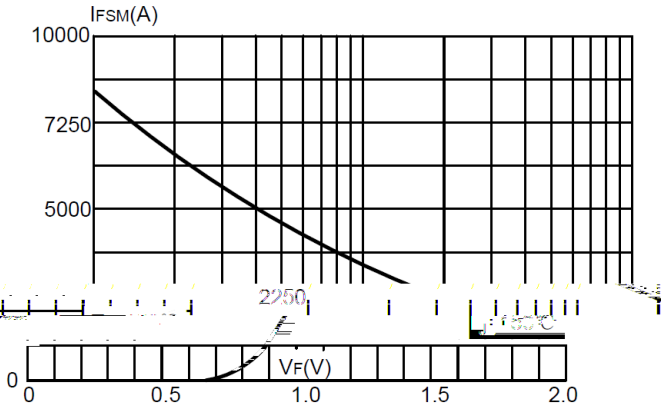

FIG.3: Forward current vs. case temperature

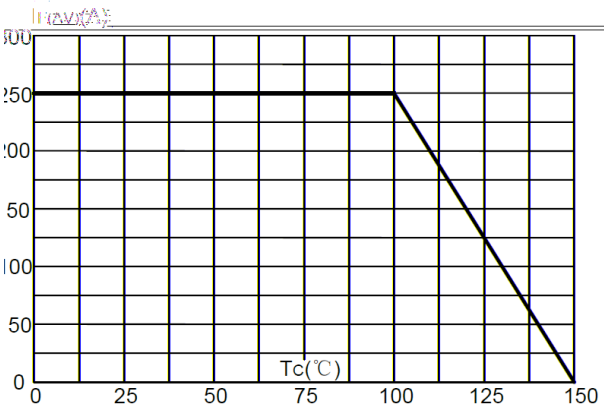

FIG.4: Maximum transient thermal impedance

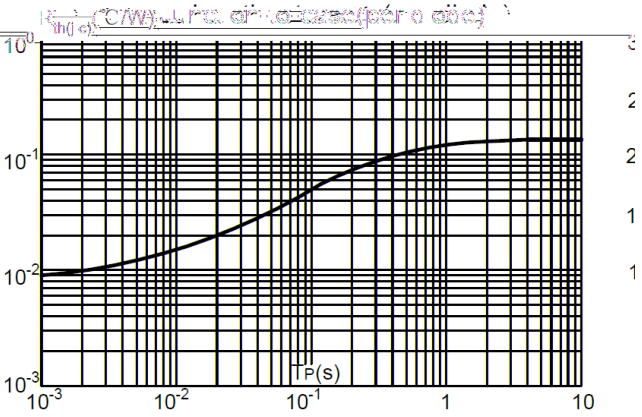

JBDVJU JBHSB

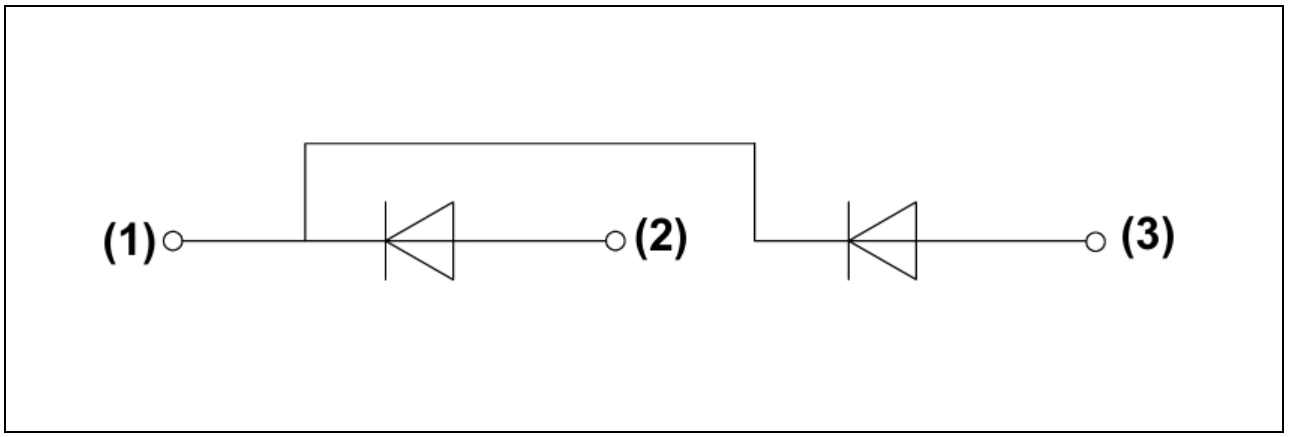

1 BDLBHF 0 VUMCFT

