℃		



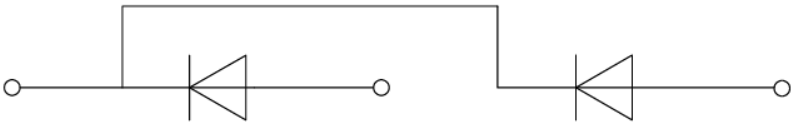

	℃			

	℃					
	℃					
	℃					
						Ω

FIG.1: Forward characteristics(per diode)

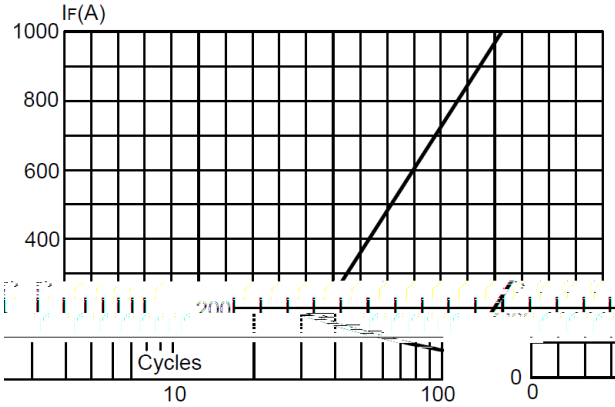

FIG.2: Peak on-state surge current

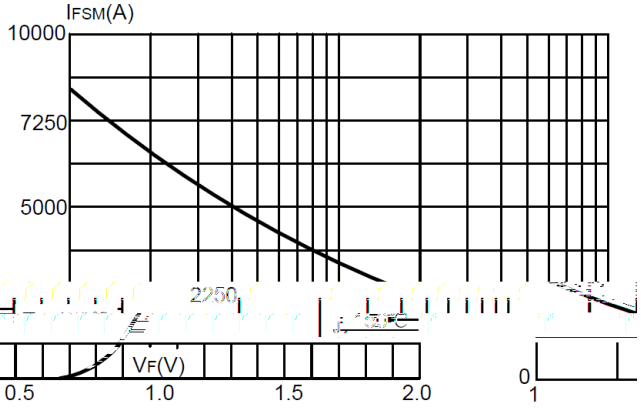

FIG.3: Forward current vs. case temperature

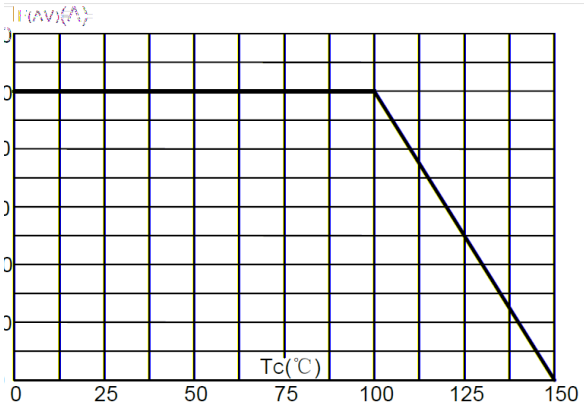

FIG.4: Maximum transient thermal impedance

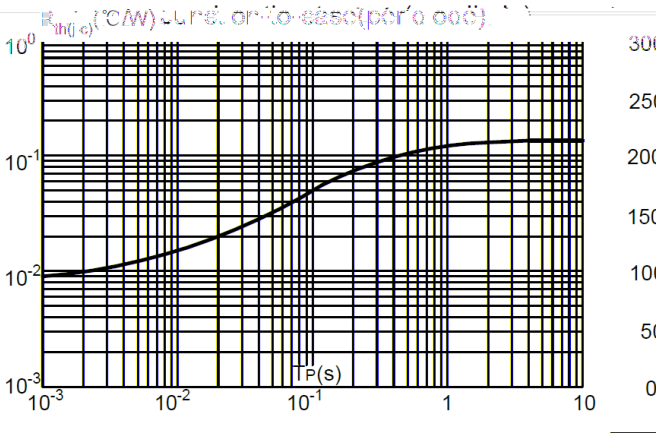

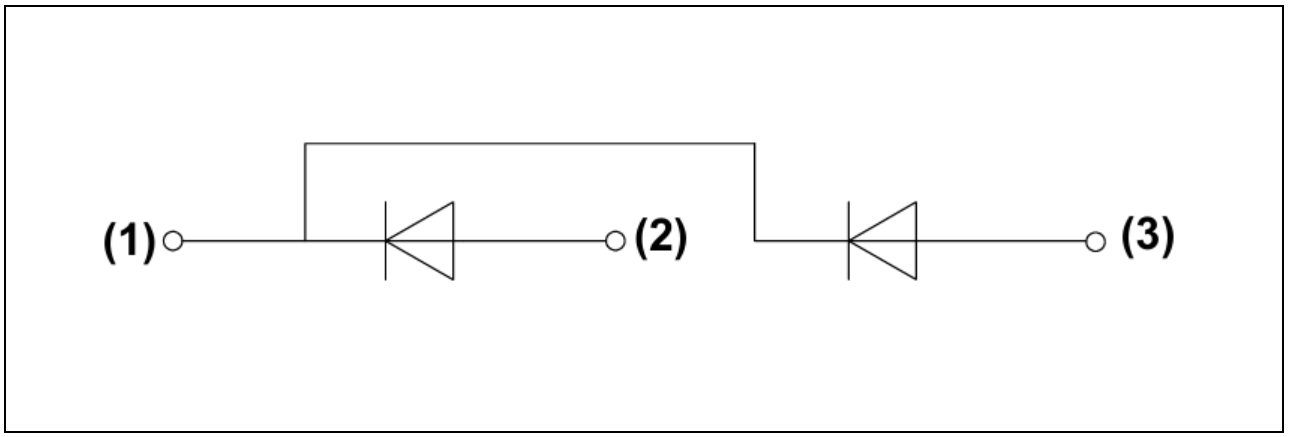

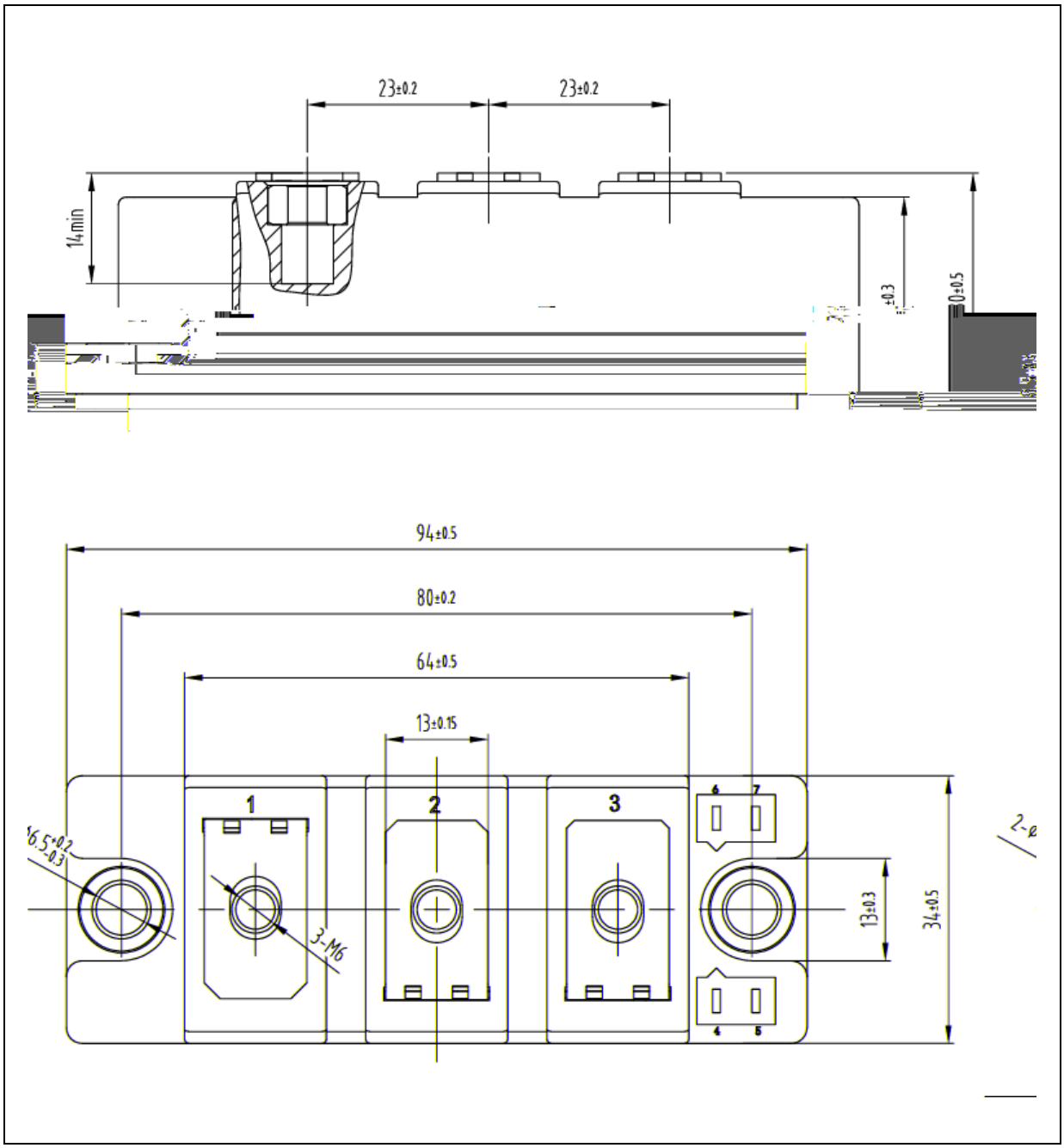
23±0.2
23±0.2
14min
±0.3
0±0.5
94±0.5
80±0.2
64±0.5
13±0.15
1
2
3
6
7
4
5
3-M6
13±0.3
34±0.5