JMD250MD20T2A

# Diode Module

## Features

## Product Summary

| Parameter | Value | Unit |
|---|---|---|
| | | |
| ℃ | | |
| | | |
| | | |

## Applications



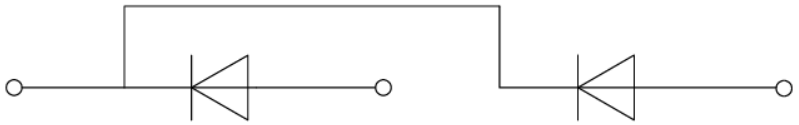

## Absolute Maximum Ratings

| Parameter | Conditions | Symbol | Values | Unit |
|---|---|---|---|---|
| | | | | |
| | | | | |
| | | | | |
| | ℃ | | | |
| | | | | |
| | | | | |
| | | | | |
| | | | | |

## Electrical Characteristics

| Parameter | Conditions | Symbol | Values | | | Unit |
|---|---|---|---|---|---|---|
| | | | Min. | Typ. | Max. | |
| | | | | | | |
| | ℃ | | | | | |
| | ℃ | | | | | |
| | ℃ | | | | | |
| | | | | | | Ω |

## Thermal Characteristics

| Parameter | Conditions | Symbol | Values | | | Unit |
|---|---|---|---|---|---|---|
| | | | Min. | Typ. | Max. | |
| | | | | | | |
| | | | | | | |
| | | | | | | |
| | | | | | | |

## Ordering Information

| Device | Marking | Package | Weight | Inner Box | Per Carton |
|---|---|---|---|---|---|

## Typical Electrical & Thermal Characteristics

**FIG.1:** Forward characteristics(per diode)

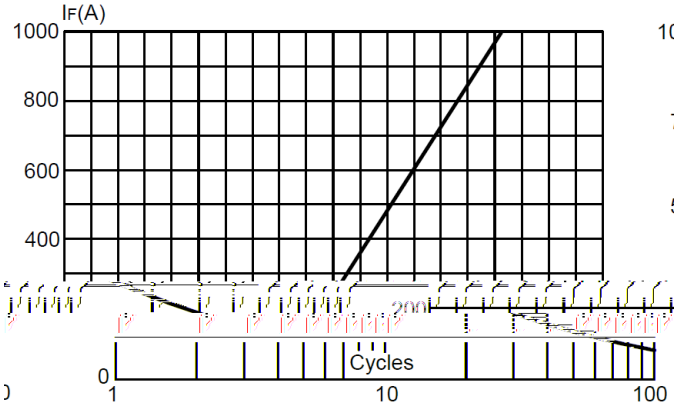


**FIG.2:** Peak on-state surge current

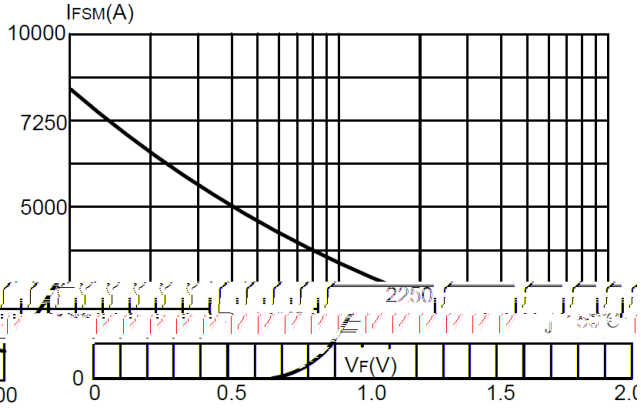


**FIG.3:** Forward current vs. case temperature

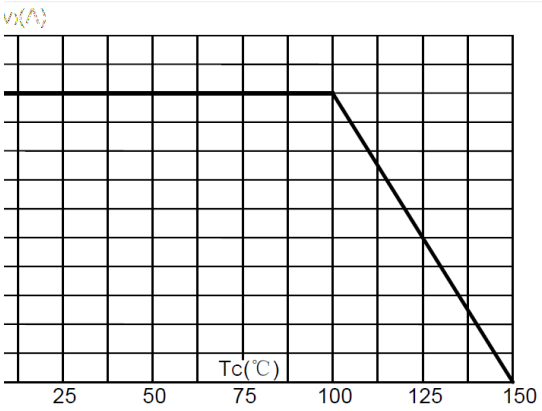


**FIG.4:** Maximum transient thermal impedance

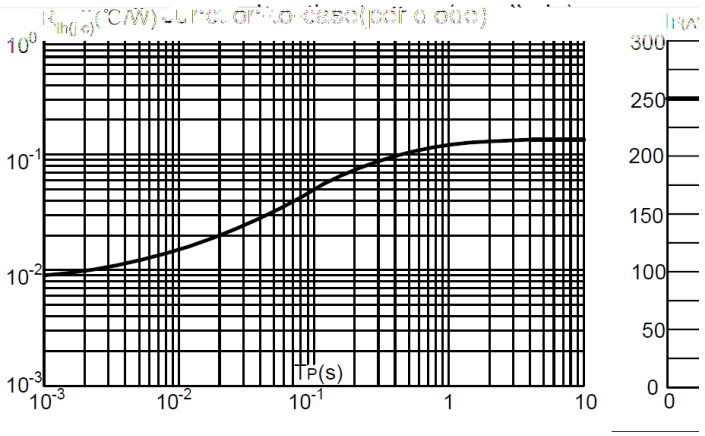


## Circuit Diagram

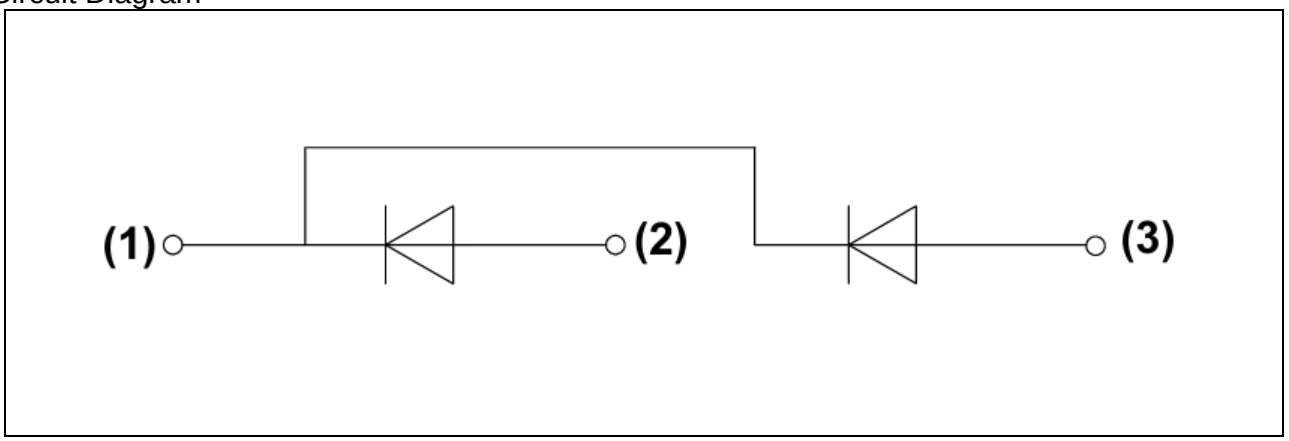

Package Outlines (mm)

