| | | |
|---|---|---|
| | | |
| ℃ | | |
| | | |
| | | |



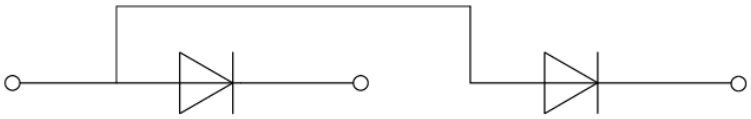

| | | | | |
|---|---|---|---|---|
| | | | | |
| | | | | |
| | | | | |
| | ℃ | | | |
| | | | | |
| | | | | |
| | | | | |

| | | | | | | |
|---|---|---|---|---|---|---|
| | | | | | | |
| | | | | | | |
| | ℃ | | | | | |
| | ℃ | | | | | |
| | ℃ | | | | | |
| | | | | | | Ω |

| | | | | | | |
|---|---|---|---|---|---|---|
| | | | | | | |
| | | | | | | |
| | | | | | | |
| | | | | | | |

| | | | | | |
|---|---|---|---|---|---|
| | | | | | |

**FIG.1:** Forward characteristics(per diode)

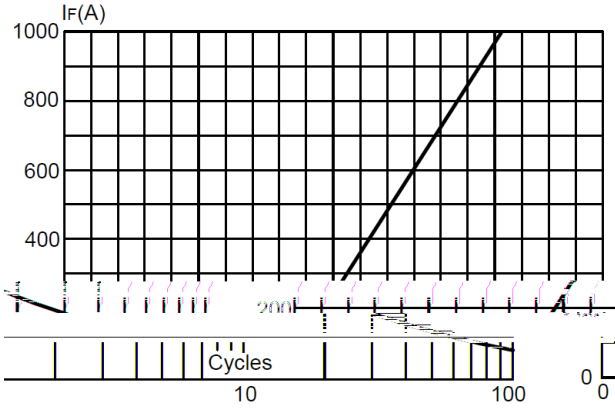


**FIG.2:** Peak on-state surge current

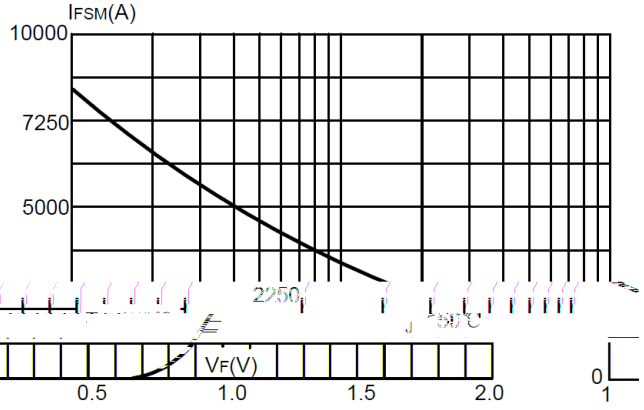


**FIG.3:** Forward current vs. case temperature

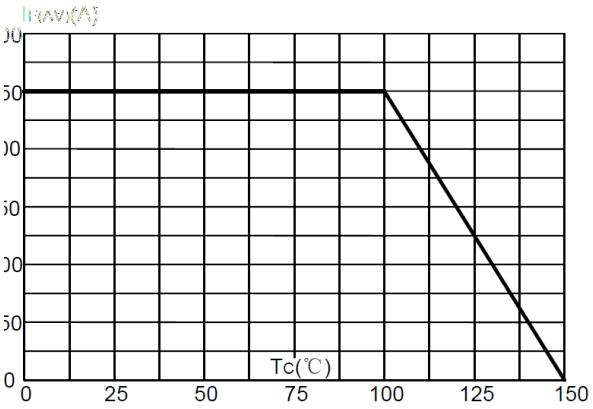


**FIG.4:** Maximum transient thermal impedance

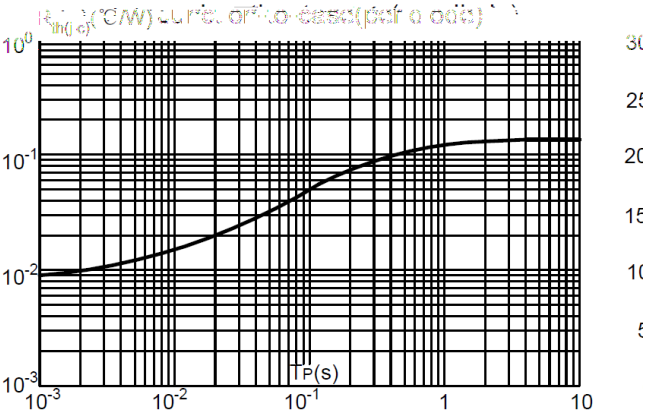


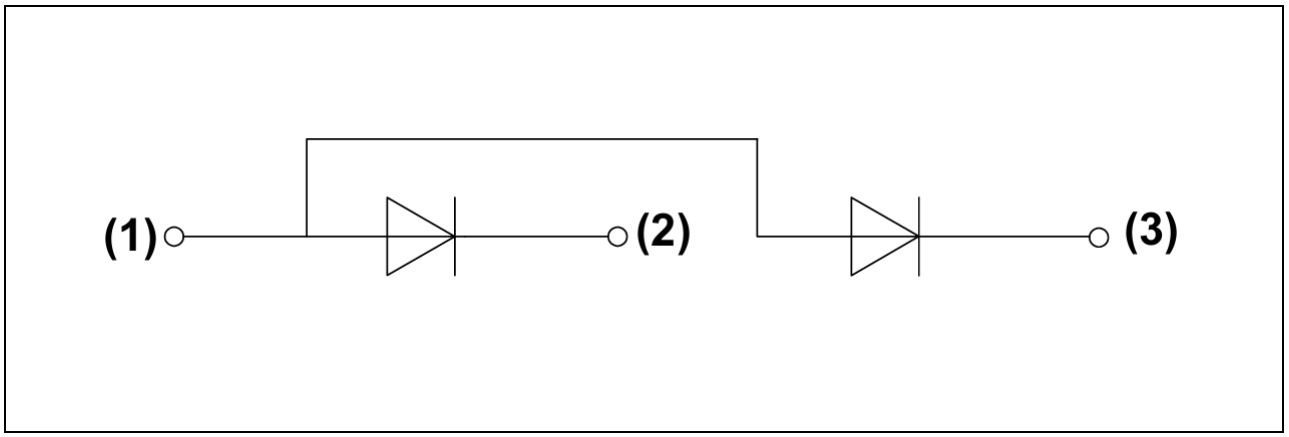

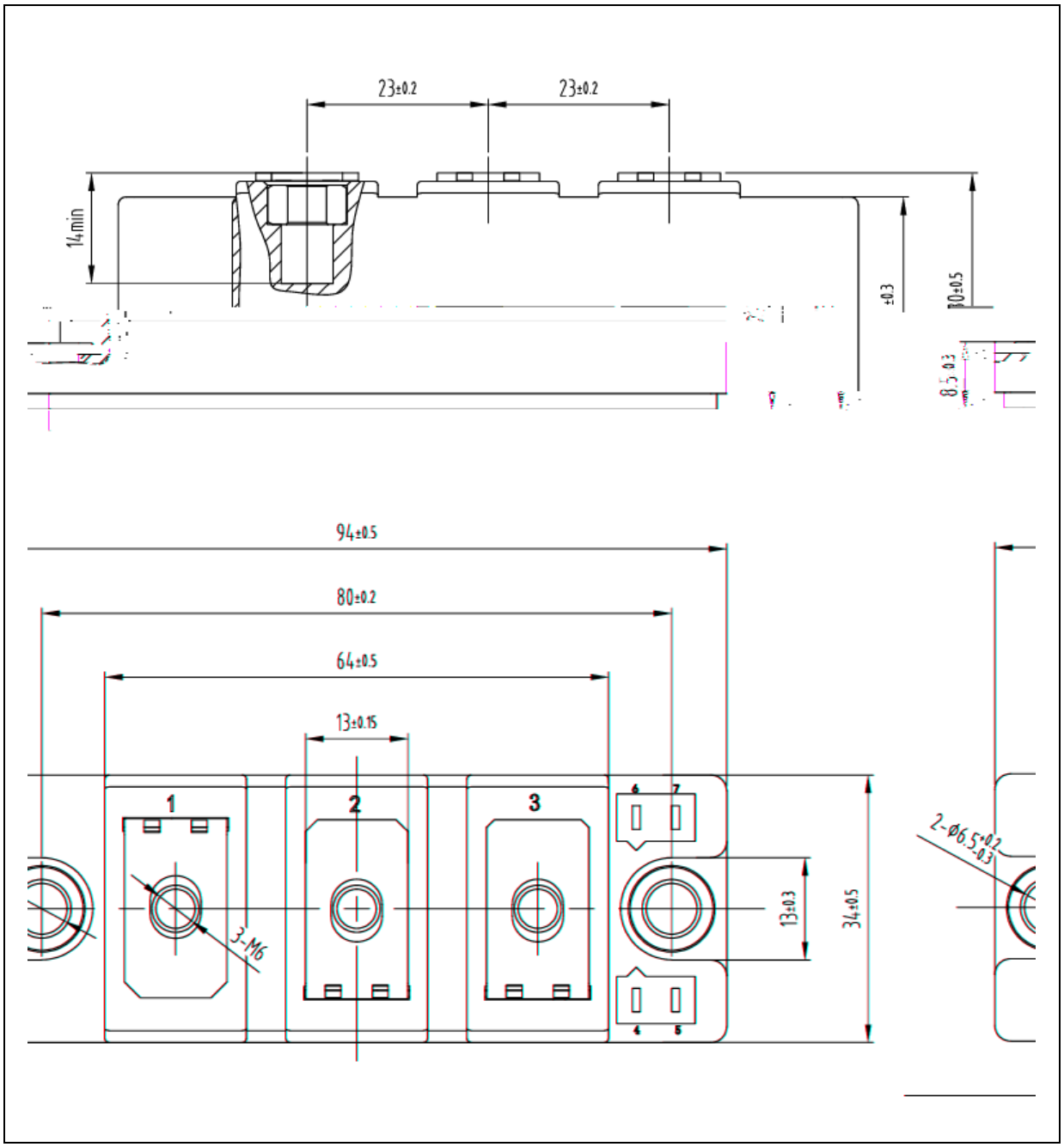
23±0.2
23±0.2
14min
±0.3
30±0.5
8.5 0.3
94±0.5
80±0.2
64±0.5
13±0.15
1
2
3
3-M6
13±0.3
34±0.5
2-φ6.5 +0.2 -0.3