: T OR OUS O R SO OUS Q S

: R QO QS OQ OUS

6 UV USQ S QO OP

D@@		D
7Z2		/
74A . +		/
D4 O		D

4SR T 21

: S SQ TS T O SR/1 Q S

Q OPS SQ TS T /1 21 Q S S



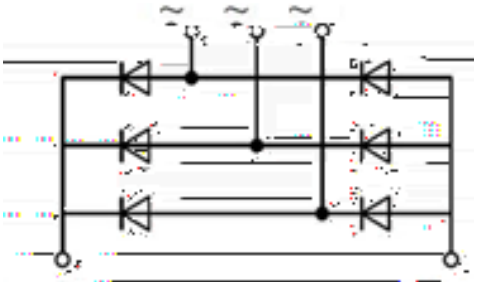

. B1 + 1 S VS S SQTSR

@S S S SO S S S OUS		D@@		D
S S S SO S S S OUS		D@A		D
= Q S	B1 + ℃	7Z2		/
4 OR USQ S	Q QS A S O S 6 B + ℃	74A		/
7 O ST T U		7		/
@ A O OUS	/ 1 6	D7A=		D
8 Q S SO S O US		B8		
A OUS S SO S O US		B U		℃

. B_1 + 1 S VS S SQTSR

4 OR OUS	7₂ + / B + ℃	D_4				D
@S S S SO OUS Q S	D@+ D@@ B + ℃	7@@				/
	D@+ D@@ B + ℃					/
BVS V R OUS	4 S QDQ O B + ℃	$D_{B=}$				D
2 O Q S O QS		B				

. B_1 + 1 S VS S SQTSR

BVS O SRO QS Q QD S	S R RS	@V Q				E
U S	0O S OS VSO QS					
	3 SQ RS S O QS					

8 2 B2 2 6	8 2 B2 2 6	2 6	U 1A	1A	1A

FIG.1: Forward characteristics(per diode)

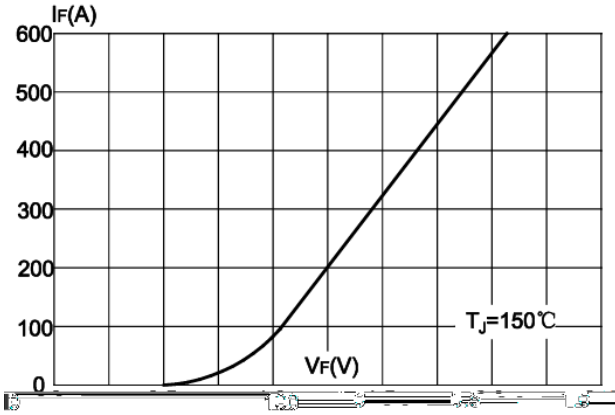

FIG.2: Peak on-state surge current

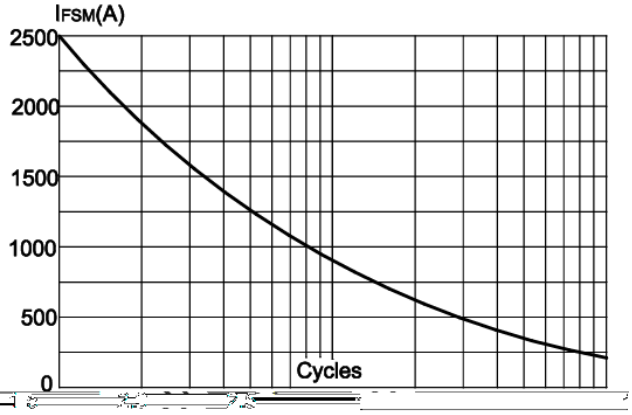

FIG.3: Forward current vs. case temperature

FIG.4: Maximum transie

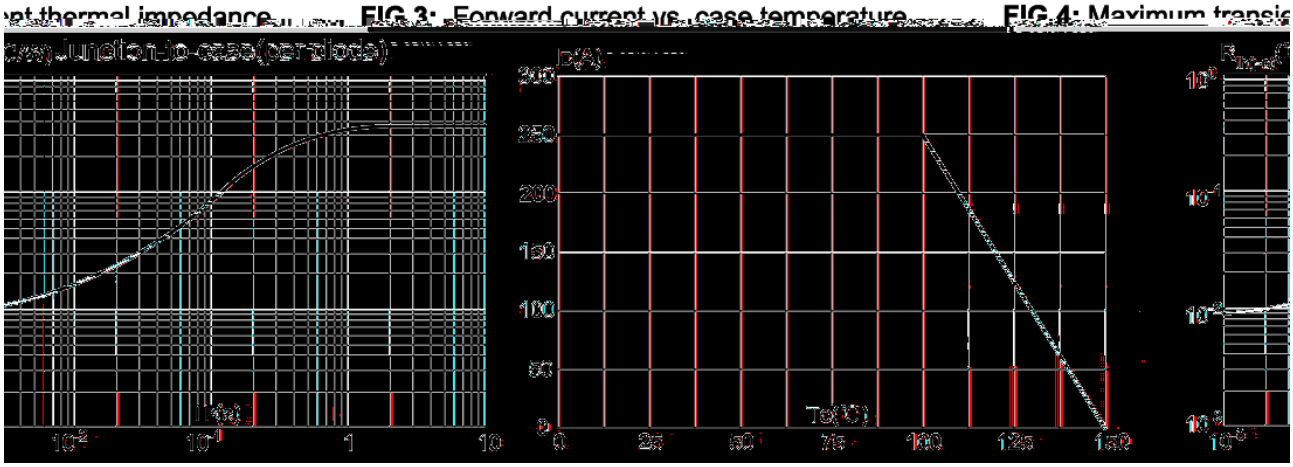

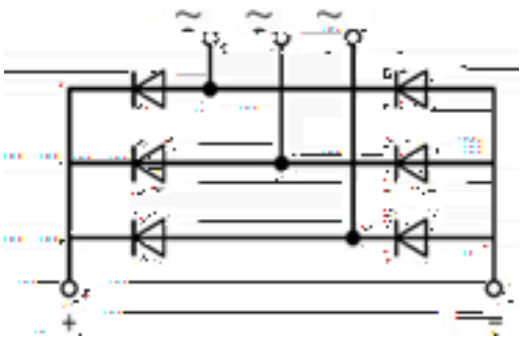

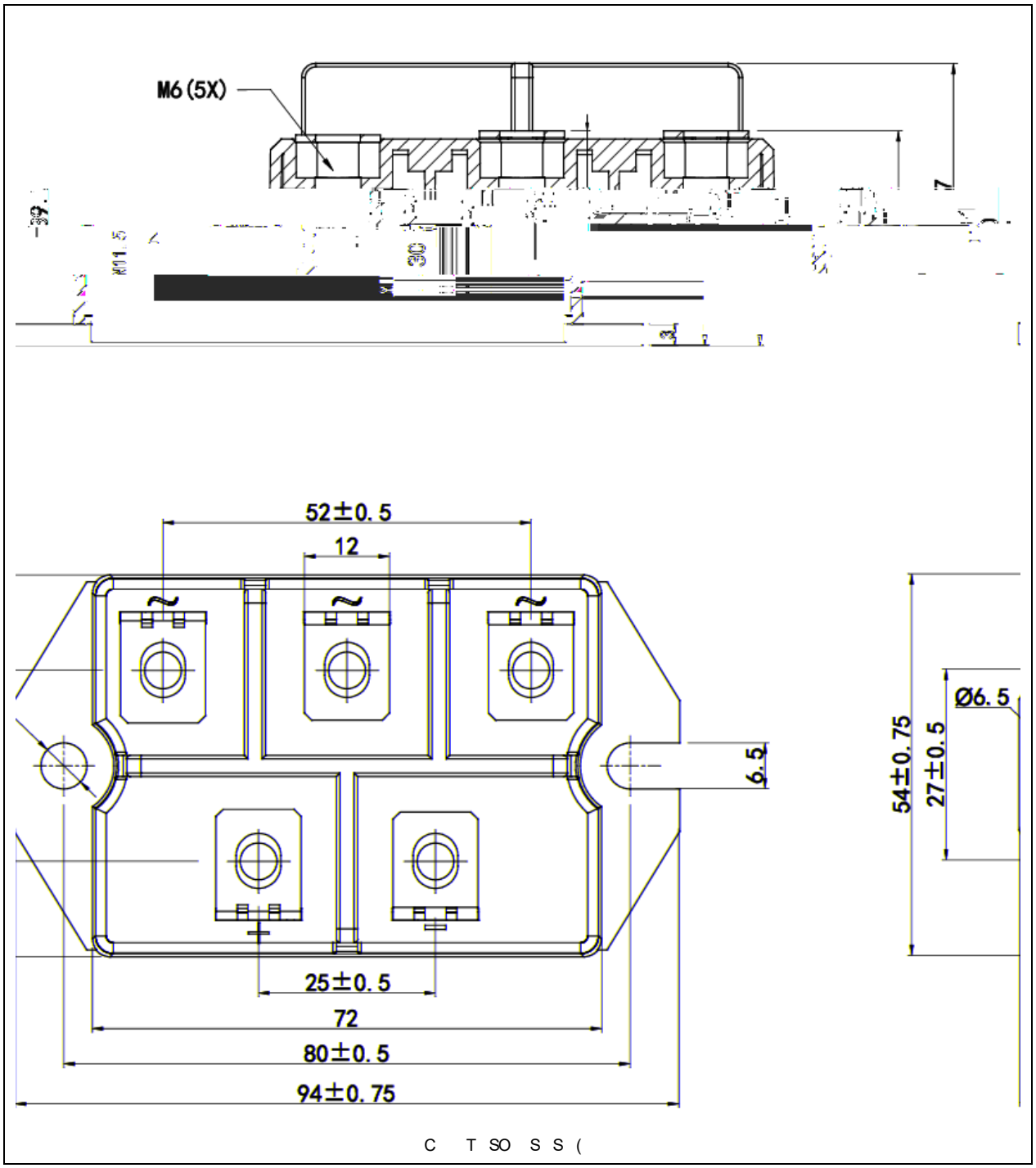

C T SO S S (

7T O T VSR V R Q S PS S SR PS OQQ OS O R S OPS 6 S S
8O U 8S8S AS Q R Q 1 : RO S S P T VSQ S S QS T S
V Q RS O T QV T O SPS R BV T O V R Q S
PSQ QVO US V QS V O R U V 8O U 8S8S T Q
V VS S SR O U SR OU SS S R Q O R T O RSR V
R Q S VO S T US S T OS 8O U 8S8S O S S P T O
T US S T VS UV T V R O S VQV O S T VS S T QV R Q O R
T O BV R Q S VS O S SO S RO SR 8 BV R Q S
S SRS O R S OQS O T O S SR

SU S SR ORS O T8O U 8S8S AS Q R Q 1 : 8O U 8S8S
AS Q R Q 1 : R / UV S S SR