JMD380KD16T3W

Diode Module

Features

- A package of series of two diodes
- With high thermal conductivity DBC as the Insulation
- Welding by vacuum welding technology, which provide high reliability

Product Summary

Applications

- AC converter
- Inverter
- DC motor

Absolute Maximum Ratings (@ T_C = 25°C unless otherwise specified)

Parameter	Conditions	Symbol	Values	Unit
Repetitive peak reverse voltage	Tvj = 25°C	V_{RRM}	1600	V
Non-repetitive peak reverse voltage	Tvj = 25°C	V_{RSM}	1700	V
Average forward current	T_C = 100°C	$I_{F(AV)}$	380	A
Forward surge current	1/2 cycle, Sine wave, 50Hz Tvj = 25	I_{FSM}	12000	A
I^2t value for fusing		I^2t	720000	A^2s
RMS isolation voltage	A.C 50Hz(1s/1min)	V_{ISO}	3600/3000	V
Junction temperature range		T_J	-40 ~ +150	
Storage temperature range		T_{stg}	-40 ~ +125	

All product information are copyrighted and subject to legal disclaimers

Electrical Characteristics (@ T_C = 25°C unless otherwise specified)

Parameter	Conditions	Symbol	Values			Unit
			Min.	Typ.	Max.	
Peak forward voltage	I_F=1140A, t_P=380	V_F			1.60	V
Reverse leakage current	$V_R = V_{RRM}, T_{vj}$ = 25	I_{RRM}			100	A
	$V_R = V_{RRM}, T_{vj}$ = 150				100	mA
Threshold voltage	T_{vj} = 150 , for power loss calculation only	V_{TO}			0.75	V
Dynamic resistance		r_T			0.6	m

Thermal Characteristics (@ T_C = 25°C unless otherwise specified)

Parameter	Conditions	Symbol	Values			Unit
			Min.	Typ.	Max.	
Thermal resistance, junction to case	per diode	$R_{th(j-c)}$		0.1		/W
Thermal resistance, case to heatsink	per diode	$R_{th(c-s)}$		0.045		/W
Mounting torque	Module and heatsink fixed torque M5	M	4.25		5.75	N·m
	Electrode connection torque M8		7.65		10.34	N·m

Ordering Information

Device	Marking	Package	Weight	Inner Box	Pre Carton
JMD380KD16T3W	JMD380KD16T3W	T3	355 5g/PCS	3 PCS	27 PCS

Jiangsu JieJie Microelectronics Co., Ltd.
All product information are copyrighted and subject to legal disclaimers

Typical Electrical & Thermal Characteristics

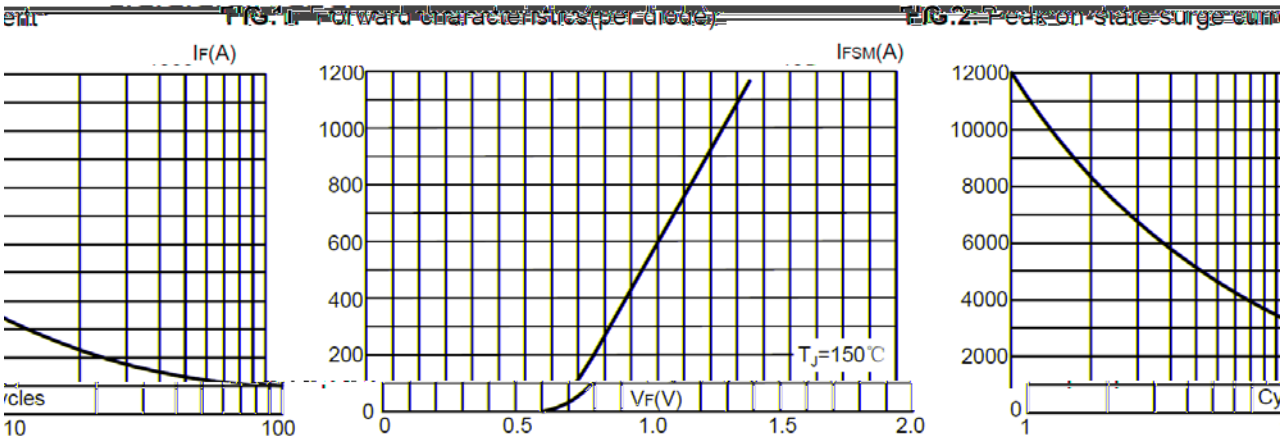

FIG.3: Forward current vs. case temperature

FIG.4: Maximum transient thermal impedance

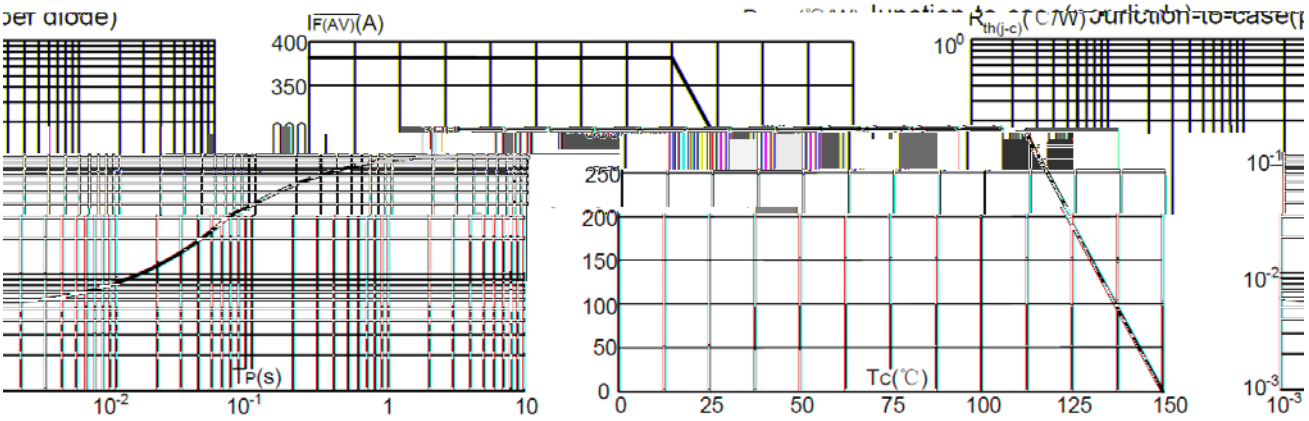

Circuit Diagram

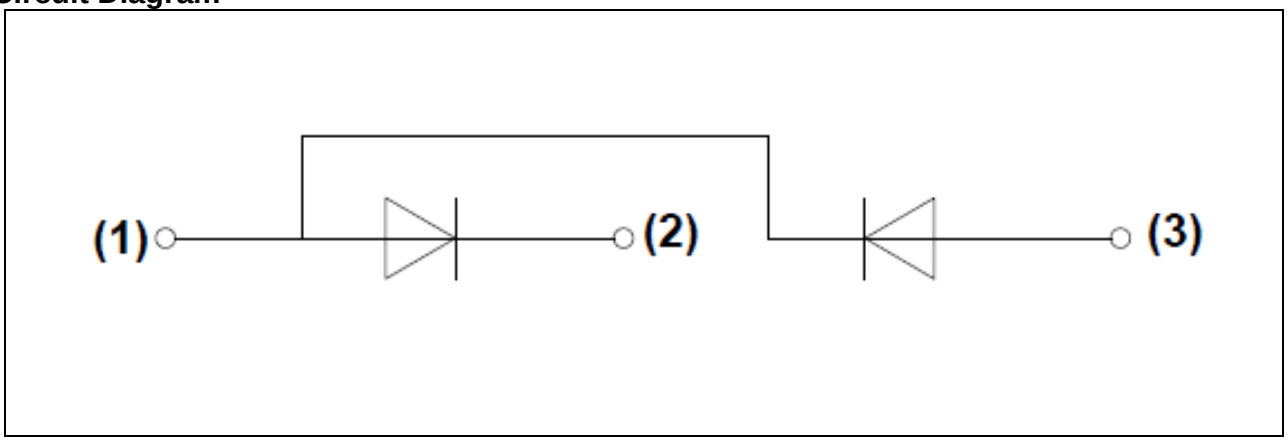

Jiangsu JieJie Microelectronics Co., Ltd.
All product information are copyrighted and subject to legal disclaimers

Package Outlines (mm)

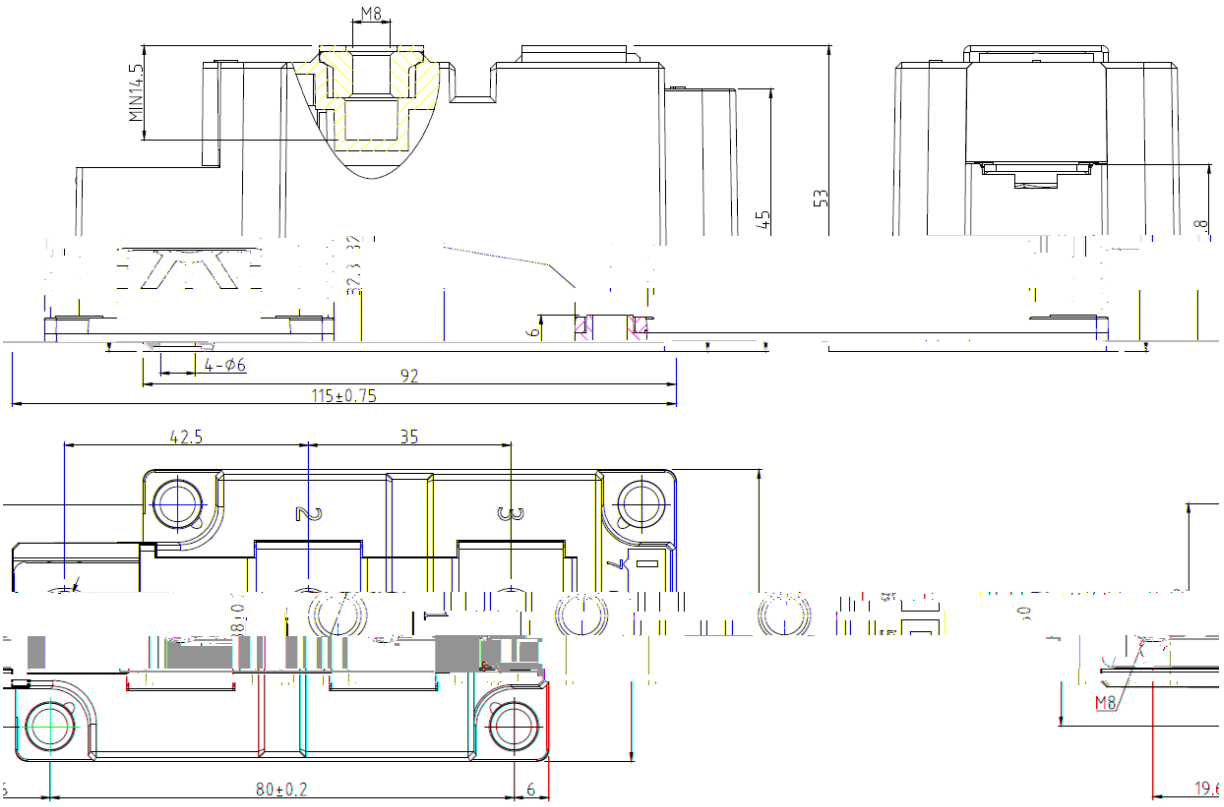

Unit of measurement: mm

All product information are copyrighted and subject to legal disclaimers

Information furnished in this document is believed to be accurate and reliable. However, Jiangsu JieJie Semiconductor Co., Ltd assumes no responsibility for the consequences of use without consideration for such information nor use beyond it. This information in this document is subject to change without prior notice. Notwithstanding this, Jiangsu JieJie will fully comply with the terms outlined in a signed agreement. Products and information provided in this document have no infringement of patents. Jiangsu JieJie assumes no responsibility for any infringement of other rights of third parties which may result from the use of such products and information. This document is the initial release, dated 24 July 2026. This document supersedes and replaces all information previously supplied.

is registered trademark of Jiangsu JieJie Semiconductor Co., Lt ©2026 Jiangsu JieJie Semiconductor Co., Ltd. All rights reserved.