JMD40MD16T1A

Features

Product Summary

Applications

Absolute Maximum Ratings

Parameter	Conditions	Symbol	Values	Unit
	℃			

Electrical Characteristics

Parameter	Conditions	Symbol	Values			Unit
			Min.	Typ.	Max.	
	℃					
	℃					
	℃					
						Ω

Thermal Characteristics

Parameter	Conditions	Symbol	Values			Unit
			Min.	Typ.	Max.	

Ordering Information

Device	Marking	Package	Weight	Inner Box	Per Carton

Typical Electrical & Thermal Characteristics

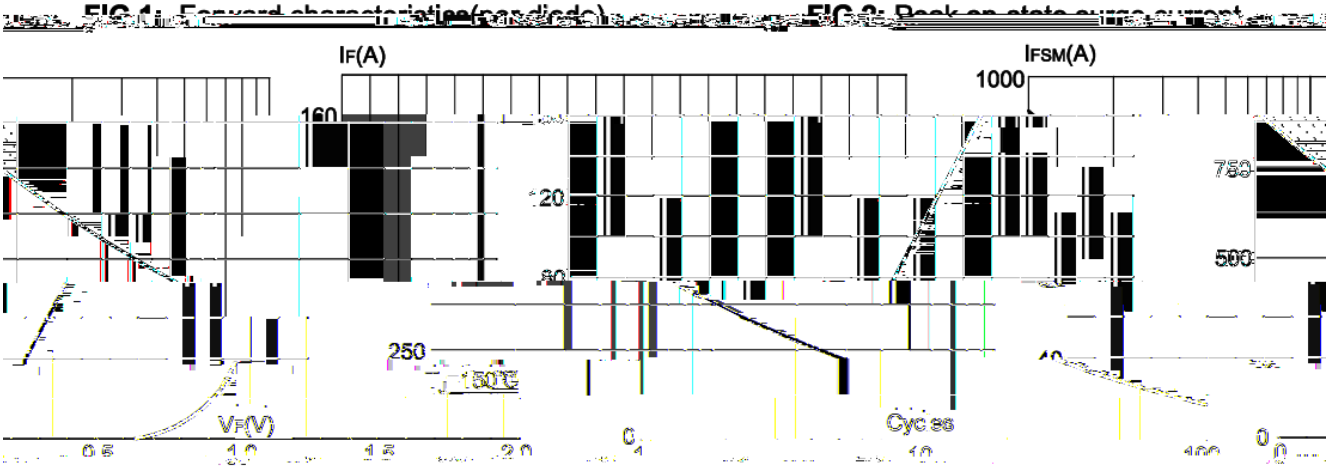

ermal impedance per diode)

FIG.3: Forward current vs. case temperature

FIG.4: Maximum transient th

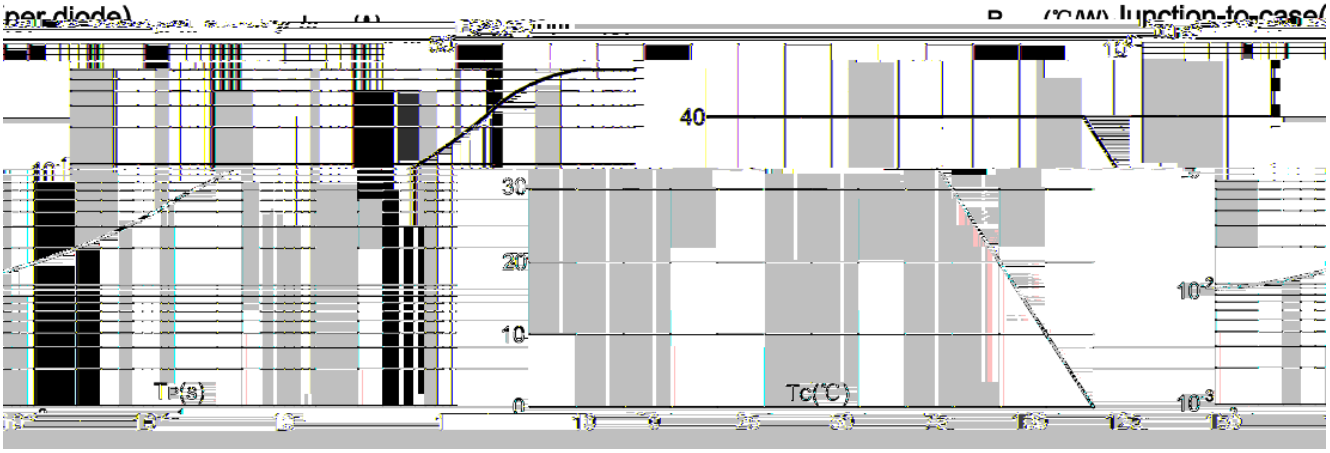

Circuit Diagram

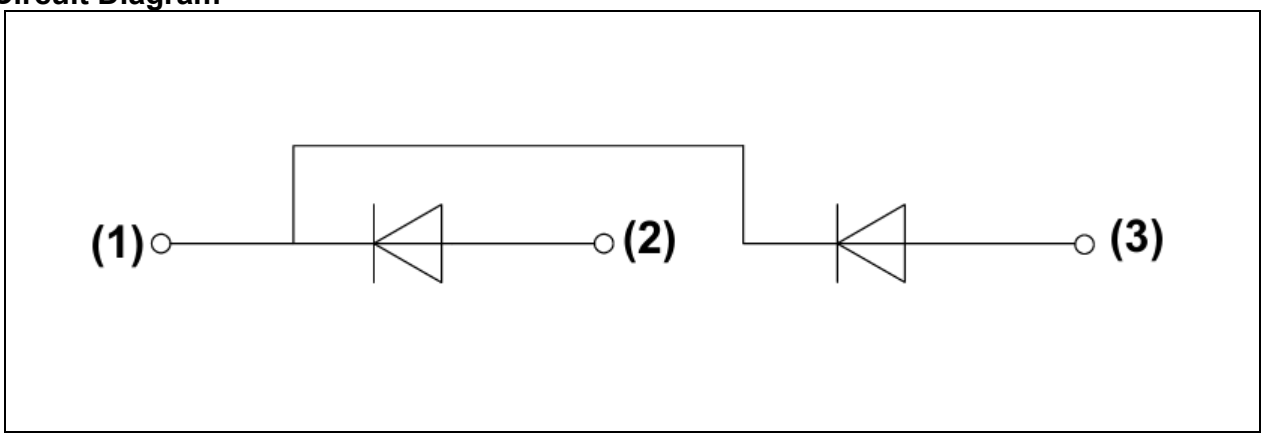

Package Outlines (mm)

