	℃			

	℃					
	℃					
	℃					
						Ω

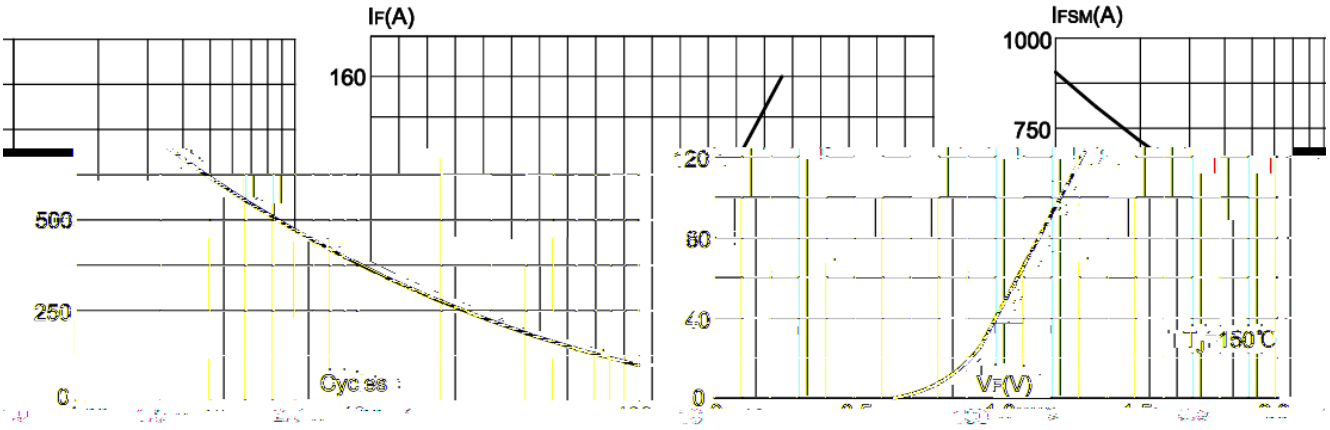

nt vs. case temperature **FIG.4:** Maximum transient thermal impedance **FIG.3:** Forward curre

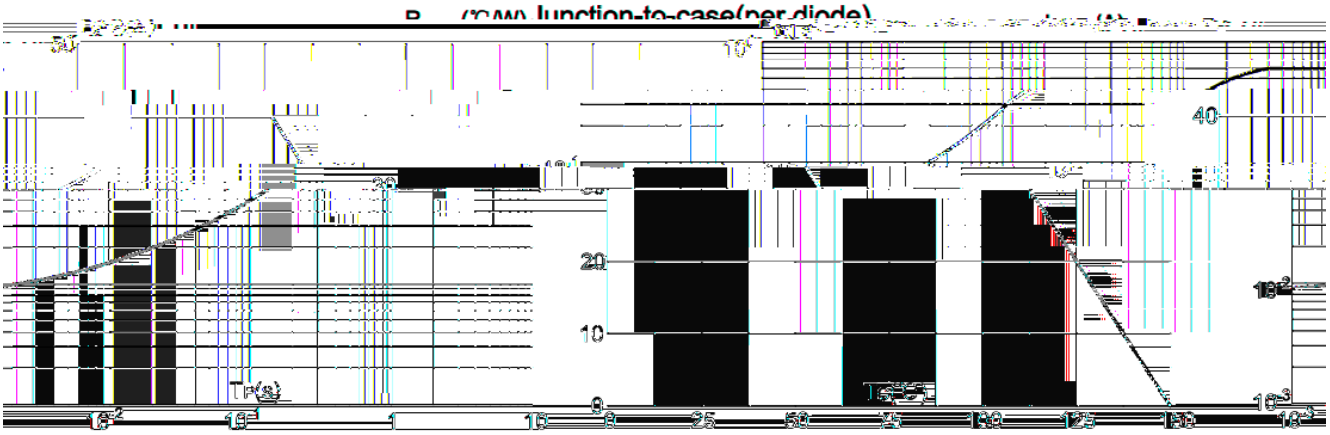

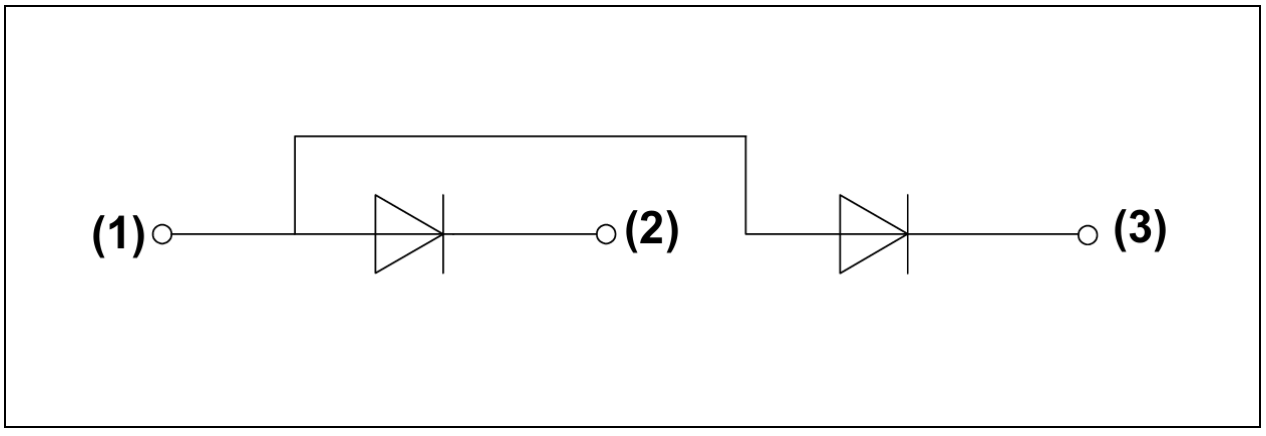

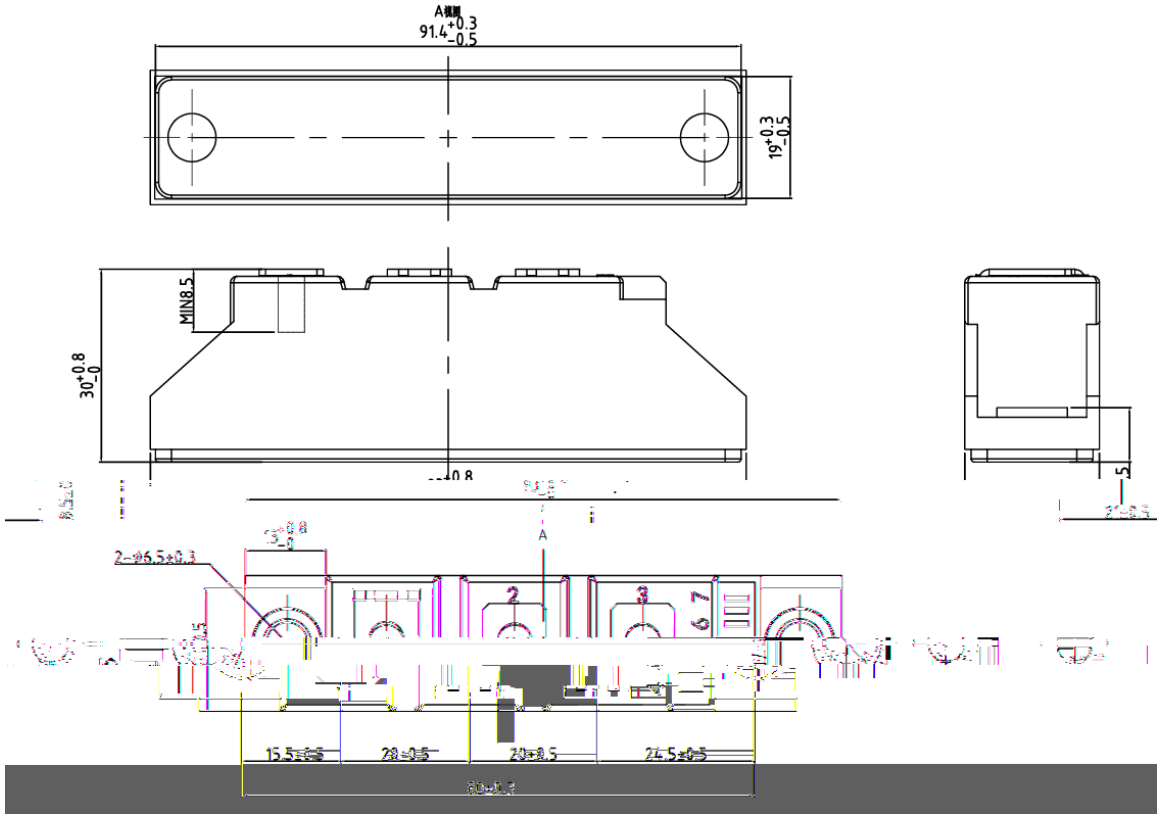

A
91.4 +0.3 −0.5
19 +0.3 −0.5
MIN8.5
30 +0.8 −0
2−φ6.5±0.3
A
2
3
6 7
15.5±0.5
20±0.5
20±0.5
24.5±0.5