" (@ T_C = 25℃ unless otherwise specified)

	"					4
Peak forward voltage	I_F=120A, t_P=380	V_F			1.60	V
Reverse leakage current	V_R = V_{RRM}, T_{vj} = 25℃	I_{RRM}			100	A
	V_R = V_{RRM}, T_{vj} = 150℃				30	mA
Threshold voltage	T_{vj} = 150℃, for power loss calculation only	V_{TO}			0.85	V
Dynamic resistance		r_T			3.8	mΩ

" (@ T_C = 25℃ unless otherwise specified)

	"					4
Thermal resistance, junction to case	per diode	$R_{th(j-c)}$		0.60		K/W
Thermal resistance, case to heatsink	per module	$R_{th(c-s)}$		0.20		K/W
Mounting torque	Module and heatsink fixed torque M5	M	4.25		5.75	Nm
	Electrode connection torque M5		2.55		3.45	Nm

. (

				(!	"
JMD40ND18T1A	JMD40ND18T1A	T1A	100±5g/pcs	10 PCS	120 PCS

All product information are copyrighted and subject to legal disclaimers

"

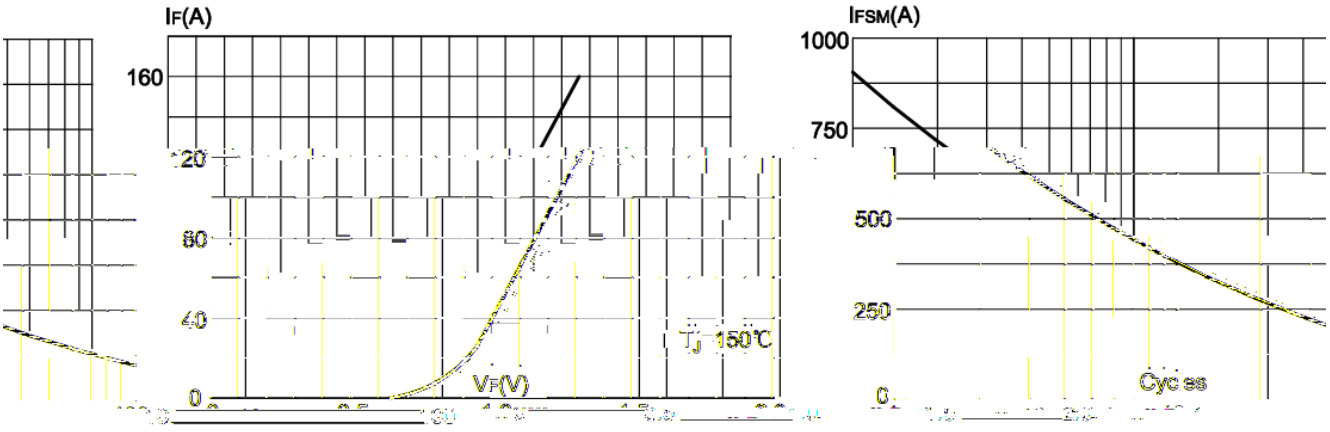

mum transient thermal impedance **FIG.3:** Forward current vs. case temperature **FIG.4:** Maxi

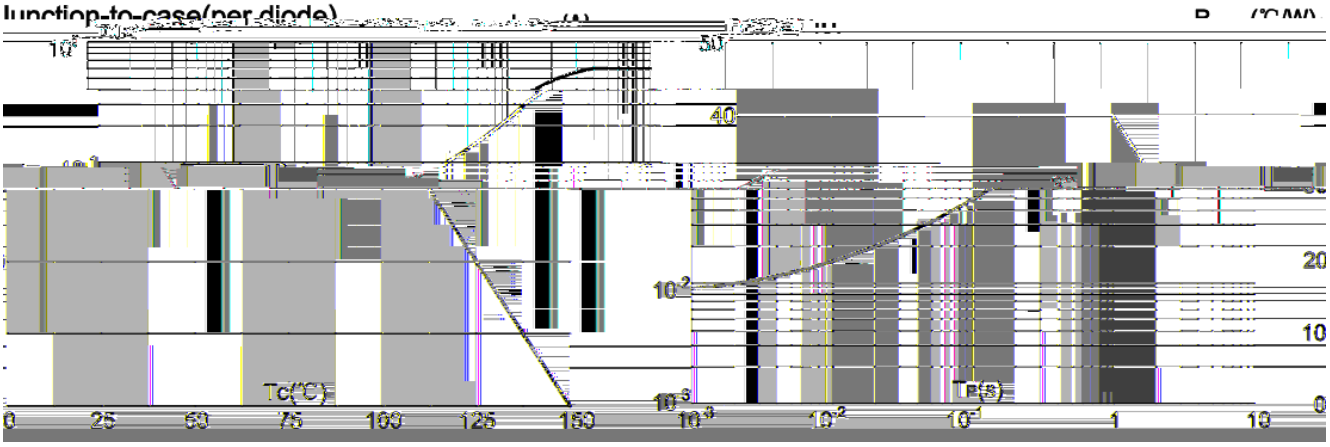

"

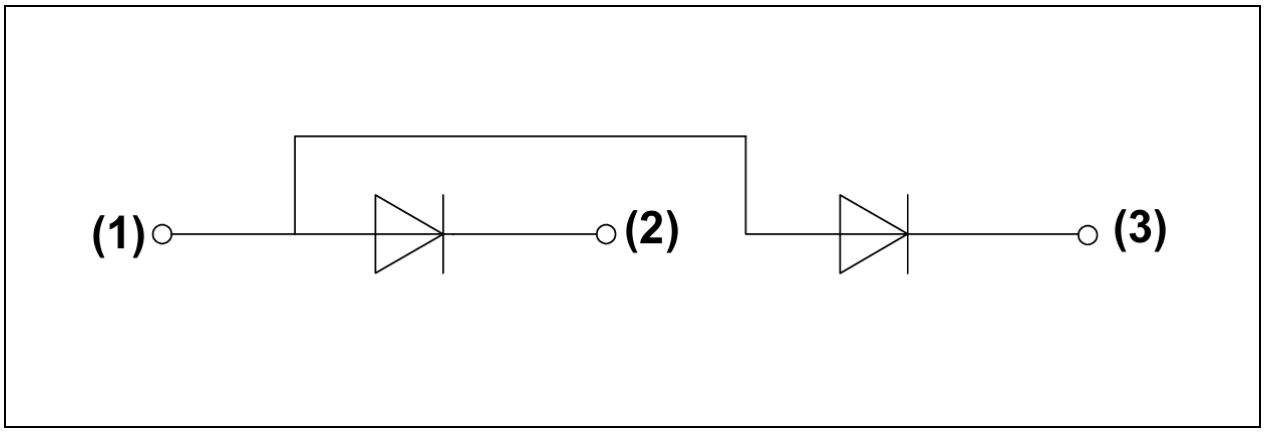

All product information are copyrighted and subject to legal disclaimers

)

.

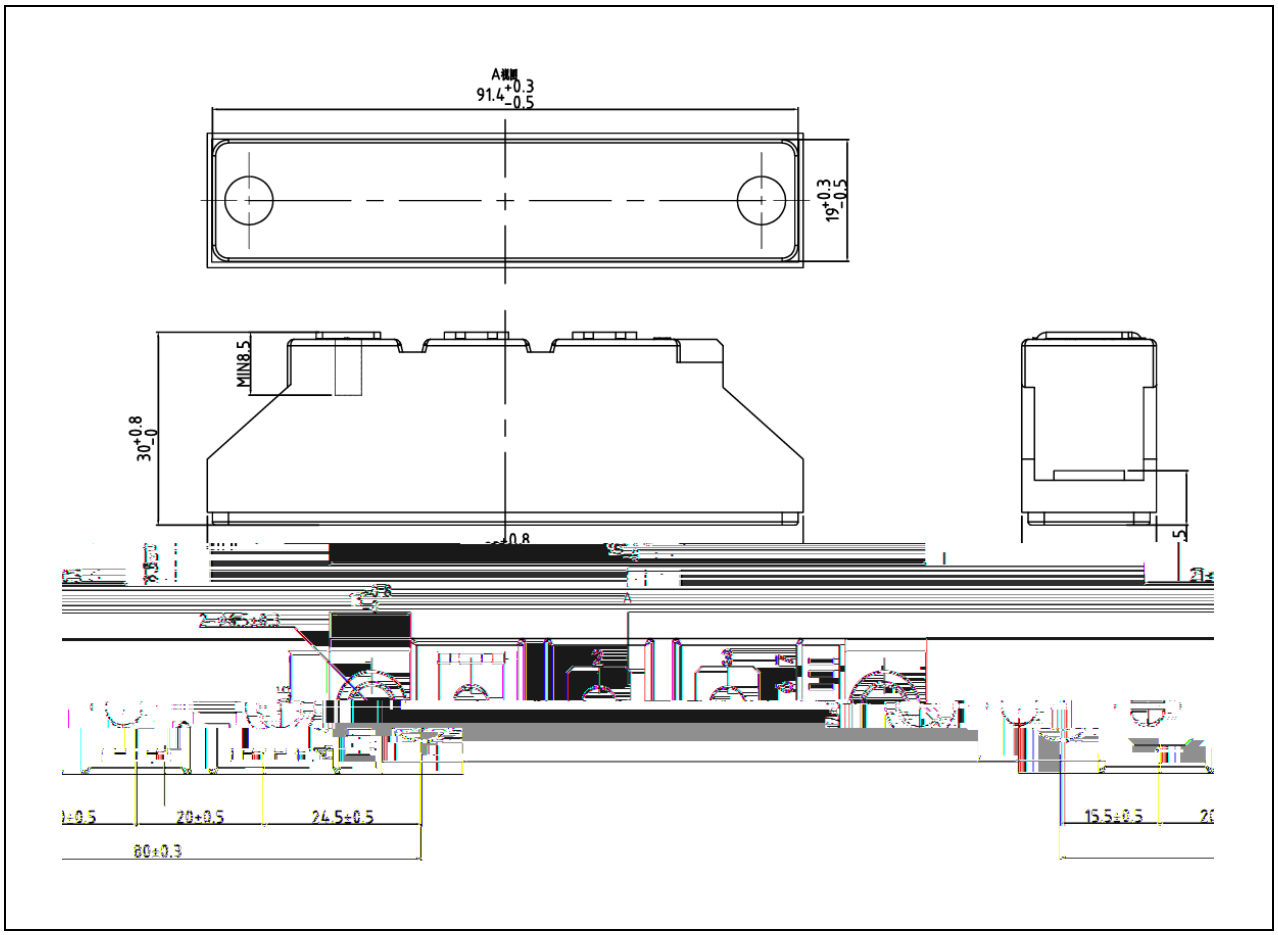

All product information are copyrighted and subject to legal disclaimers