DG 1 G 0

ct Gi of

nol m

Jli o nMog g ls

J l g n l	P fo	Ohcn
℃		

fc nct hm

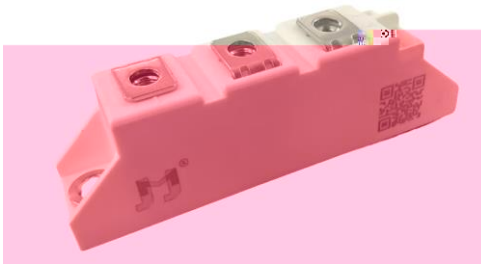

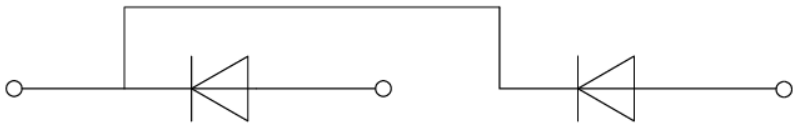

mi fon G r gg og L ndham

J l g n l	i h cnct hm	Msg i f	P fo m	Ohcn
	℃			

f nlc f b l n lcmmc m

J l g n l	i h cnc i hm	Msg i f	P fo m			Ohcn
			Gch(	s (	G r (	
	℃					
	℃					
	℃					
						Ω

b lg f b l n lcmmc m

J l g n l	i h cnc i hm	Msg i f	P fo m			Ohcn
			Gch(	s (	G r (	

I l lcha Ch i l g nc i h

pc	G lecha	J e a	cabn	Chh l i r	J l lri h

s c f f rlc f b lg f b l n lcmc m

FIG.1: Forward characteristics(per diode)

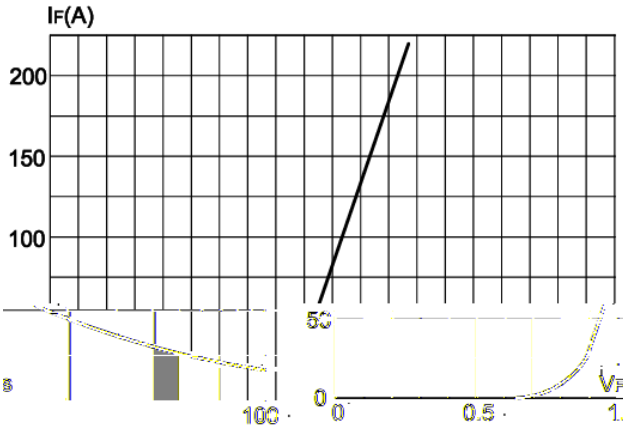

FIG.2: Peak on-state surge current

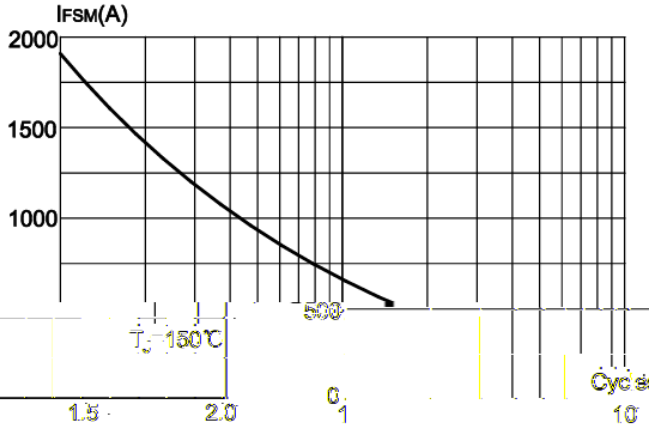

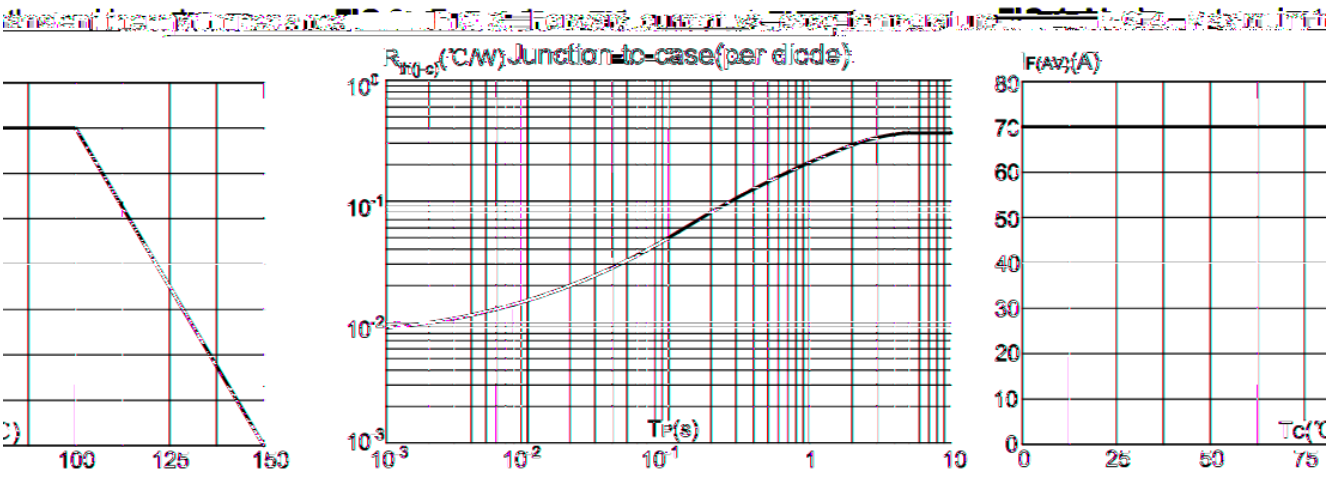

d oc c al g

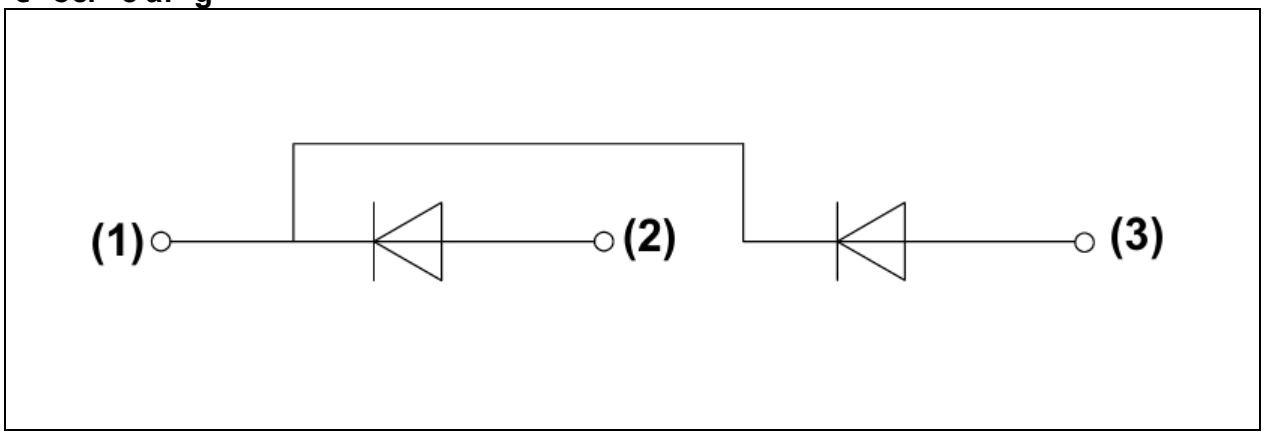

J e a l onfdh m"g g

